NAVSHIPS 93883

TECHNICAL MANUAL
FOR
ELECTRON TUBE TEST SET
AN/USM-118A

THE HICKOK ELECTRICAL INSTRUMENT COMPANY · 10514 Dupont Avenue, Cleveland 8, Ohio

TEMPORARY CHANGE T-1 TO TECHNICAL MANUAL FOR ELECTRON TUBE TEST SET

AN/USM-118A NAVSHIPS 93883

This temporary change revises the Technical Manual to reflect equipment changes made in production on Test Sets with serial number letter prefixes of "D" and above. This production change replaces the diodes in the Gm bridge circuit with higher P. I. V. rated diodes and includes the addition of a resistor and diode in the card operated switch to improve the reliability of the Gm bridge and the cardmatic switch.

Make the following pen and ink corrections. Insert this temporary change in the Technical Manual immediately after the front cover.

Add the following on page 1:

"1. 06 The following is a list of units that make up the AN/USM-118A Electron Tube Test Set.

Test Set, Electron Tube	TS-1479/USM-118A
*Card Kit, Tube Test Programming	MK-704/USM-118A
Calibration Cell, Meter Circuit	MX-4712/USM-118A

*Supplied only when specified in contract or order.

The Parts List (Table 7-1) has been corrected by SUPPLEMENTARY TABLE 7-1A, which has been inserted in the manual immediately preceeding the Parts List.

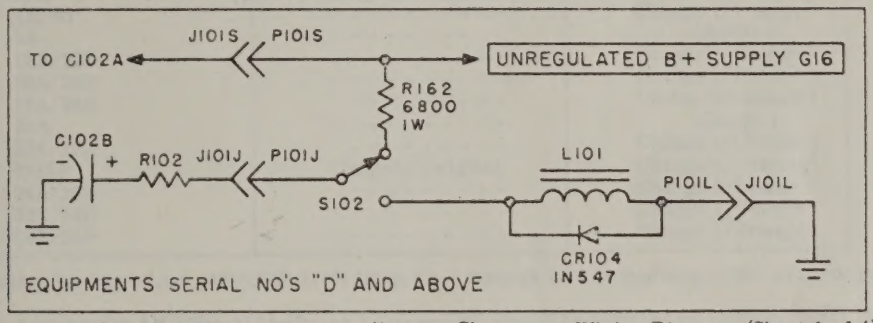

Figure 1. Partial of Wiring Diagram Showing Changes on Wiring Diagram (Sheet 1 of 4)

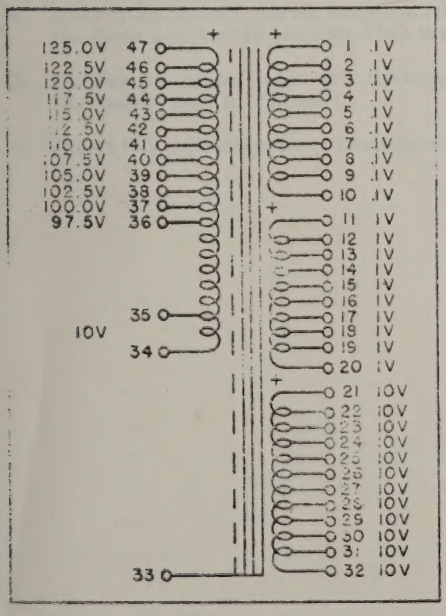

Filament Transformer

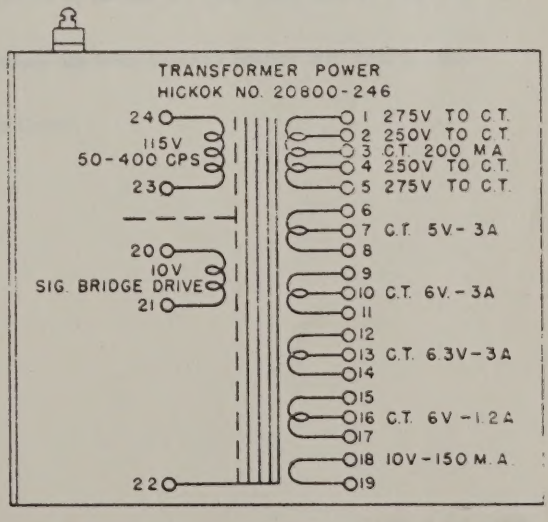

Power Transformer

19120-94

Figure 2. Transformer Diagram

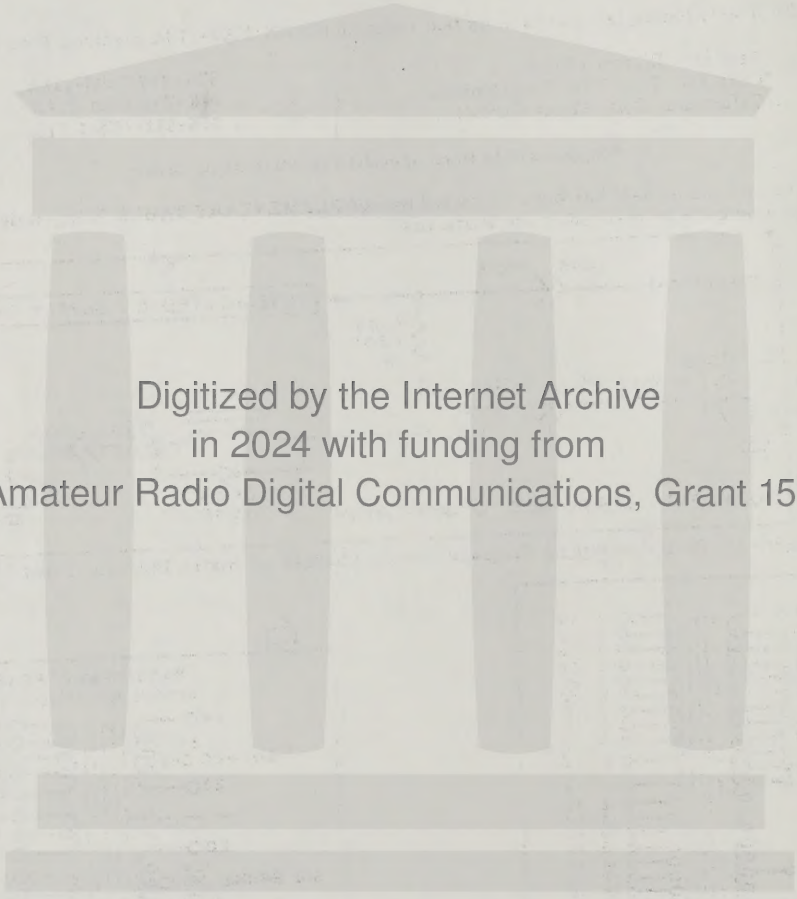

Digitized by the Internet Archive
in 2024 with funding from
Amateur Radio Digital Communications, Grant 151

https://archive.org/details/technicalmanualf00unse_15

INSTRUCTIONS

CHANGE 1 TO NAVSHIPS 93883

APPROVED 26 May 1964

TECHNICAL MANUAL
FOR
ELECTRON TUBE TEST SET
AN/USM-118 A
AND
AN/USM-118 B

This permanent change revises the technical manual to cover both the AN/USM-118A and AN/USM-118B Electron Tube Test Set.

Change 1 is to be inserted in the technical manual immediately upon receipt.

1. Remove superseded pages and insert revised pages as indicated below:

Page	Remove	Insert
Title/Guarantee	Original/Original	Change 1/Change 1
T of C/List of Ill	Original/Original	Change 1/Change 1
Frontspiece	Original	Change 1
1/2	Original/Original	Change 1/Change 1
3/4	Original/Original	Change 1/Change 1
4A/4B	- - - - - - - - - -	Change 1/Change 1
8A	- - - - - - - - - -	Change 1
12A/12B	- - - - - - - - - -	Change 1/Change 1
20A/20B	- - - - - - - - - -	Change 1/Change 1
26A/26B	- - - - - - - - - -	Change 1/Change 1
28A	- - - - - - - - - -	Change 1
32A/32B	- - - - - - - - - -	Change 1/Change 1
37/38	Original/Original	Change 1/Change 1
38A/38B	- - - - - - - - - -	Change 1/Change 1
38C/38D	- - - - - - - - - -	Change 1/Change 1
38E/38F	- - - - - - - - - -	Change 1/Change 1

2. Insert Section 7, Parts List, AN/USM-118B (Pages 7-1 through 7-9) immediately after original page 48.

3. The Parts List for the AN/USM-118A (Pages 1 through 28) should be inserted immediately after Section 7.

4. Insert the schematic wiring diagrams (sheet 1 of 4 through 4 of 4) for the AN/USM-118B immediately after the Parts List for the AN/USM-118A original page 28.

5. Destroy superseded pages after the complete technical manual has been checked against the "List of effective pages" page ii, Change 1.

6. Insert this instruction sheet immediately behind the Front Cover.

640924-0119

NAVSHIPS 93883

TECHNICAL MANUAL
FOR
ELECTRON TUBE TEST SET
AN/USM-118A
AND
AN/USM-118B

THE HICKOK ELECTRICAL INSTRUMENT CO.

CONTRACT NOBSR 85003
AND NOBSR 89502

APPROVED BY BUSHIPS
3 APRIL 1961
CHANGE 1, 26 MAY 1964

2490-484

LIST OF EFFECTIVE PAGES

PAGE NUMBERS	CHANGE IN EFFECT	PAGE NUMBERS	CHANGE IN EFFECT
Title Page	Change 1	34 to 36	Change 1
ii	Change 1	37 to 38F	Change 1
iii	Change 1	39 to 48	Original
iv	Change 1	7-0 to 7-9	Change 1
v	Change 1	1 to 28	Original
vi	Change 1		
1 to 4B	Change 1	SCHEMATIC WIRING DIAGRAMS AN/USM-118B	
5 to 8	Original		
8A	Change 1	Sheet 1 of 4	Change 1
9 to 12	Original	Sheet 2 of 4	Change 1
12A and 12B	Change 1	Sheet 3 of 4	Change 1
13 to 20	Original	Sheet 4 of 4	Change 1
20A and 20B	Change 1		
21 to 26	Original	SCHEMATIC WIRING DIAGRAMS AN/USM-118A	
26A and 26B	Change 1		
27 and 28	Original	Sheet 1 of 4	Original
28A	Change 1	Sheet 2 of 4	Original
29 to 32	Original	Sheet 3 of 4	Original
32A and 32B	Change 1	Sheet 4 of 4	Original

The Hickok Electrical Instrument Company, 10514 Dupont Avenue, Cleveland Ohio 44112
Contract: NObsr 89502

Errors found in this publication (other than obvious typographical errors), which have not been corrected by means of Temporary Corrections or Permanent Changes should be reported. Such report should include the complete title of the publication and the publication number (short title); identify the page and line or figure and location of the error; and be forwarded to the Electronics Publications Section of the Bureau of Ships.

All Navy requests for NAVSHIPS electronics publications listed in the current issue of NAVSANDA Publication 2002 "Requisitioning Guide and Index of Forms and Publications", Cognizance Symbol I, or in a subsequent issue of the Electronics Information Bulletin should be directed to the appropriate Forms and Publications Supply Point.

Approved by BuShips:
3 April 1961

THE HICKOK ELECTRICAL INSTRUMENT COMPANY
10514 Dupont Avenue - Cleveland 8, Ohio

STANDARD EIA GUARANTEE

The Hickok Electrical Instrument Company warrants instruments manufactured by it to be free from defective material or factory workmanship and agrees to repair such instruments which, under normal use and service, disclose the defect to be the fault of our manufacturing. Our obligation under this warranty is limited to repairing any instrument or test equipment which proves to be defective, when returned to us transportation prepaid, within 90 days from the date of original purchase, and provided the serial number has been made known to us promptly for our records.

This warranty does not apply to any of our products which have been repaired or altered by unauthorized persons or service stations in any way so as, in our judgment, to injure their stability or reliability, or which have been subject to misuse, negligence, or accident, or which have had the serial number altered, effaced or removed. Neither does this warranty apply to any of our products which have been connected, installed, or adjusted otherwise than in accordance with the instructions furnished by us. Accessories, including all vacuum tubes not of our manufacture, used with this product are not covered by this warranty.

This warranty is in lieu of all other warranties expressed or implied, and no representative or person is authorized to assume for us any other liability in connection with the sale of our products.

Parts will be made available for a minimum period of five years after the manufacture of this equipment has been discontinued. Parts include all materials, charts, instructions, diagrams, accessories, etc., which have been furnished in the standard model.

RETURNING EQUIPMENT FOR REPAIR

Before returning any equipment for service, under warranty or otherwise, the factory must first be contacted giving the nature of the trouble. Instructions will then be given for either correcting the trouble or returning the equipment. Upon authorization, this equipment should be forwarded directly to the Hickok factory address, 10636 Leuer Avenue, Cleveland, Ohio, or to a designated service station in your locality. All correspondence pertaining to repairs should be directed to the Hickok office address, 10514 Dupont Avenue, Cleveland 8, Ohio, or to the authorized service station designated.

REGISTRATION CARD

The above guarantee is contingent upon the attached registration card being returned to the factory immediately upon receipt of the equipment.

THE HICKOK ELECTRICAL INSTRUMENT COMPANY
Cleveland, Ohio

RECORD OF CORRECTIONS MADE

CHANGE NO.	DATE	FIELD CHANGE NO.	SIGNATURE

TABLE OF CONTENTS

Paragraph		Page
1.	GENERAL	1
2.	DESCRIPTION	
	A. General	2
	B. Description of Front Panel	2
	C. Auxiliary Compartment	4
	D. Program Cards	4A
3.	CALIBRATION	6
4.	OPERATION	
	A. Normal	9
	B. Auxiliary Tests	10
	C. Hand Punch Card System	11
5.	CIRCUIT	
	A. Circuit Theory	12
	B. Circuit Description	20A
	C. Circuit Description	21
6.	MAINTENANCE	
	A. General	24
	B. Complete Calibration	24
	C. Trouble Shooting Procedure	26
	D. Miscellaneous Adjustment Procedures	32A
	D. Miscellaneous Adjustment Procedures	33
	E. Miscellaneous Parts Replacement	36
7.	PARTS LIST (AN/USM-118B)	7-0
7.	PARTS LIST (AN/USM-118A) (Back of Manual)	1

LIST OF ILLUSTRATIONS

Figure		Page
1	Model AN/USM-118 Tube Tester	vi
2	Identification of Controls and Components-AN/USM-118A	3
2A	Identification of Controls and Components-AN/USM-118B	3
3	Auxiliary Compartment	4
4	Meter Sensitivity	7
5	Punching New or Replacement Tube Test Code Cards	11
5A	Curve for Correcting Full-Wave and Half-Wave Rectifier Output Current Tests to Nominal (115 Volts) Line Value	12A
5B	Gm Correction Factor Chart	12B
6	Test Circuits for Amplifying Tubes	14
7	Special test circuits	15
8	Basic Types of Diode Test Circuits	16
9	Voltage Regulator Test Circuits	17
10	Shorts and Cathode-to-Filament Leakage Test Circuit	18
11	Shorts and Cathode-to-Filament Leakage Test Circuit (Multi-Section Tube)	18
12	Interelement Shorts Identification	20
13	Signal Regulation and Amplitude Check	24
14	B+ Power Supply Feed Back Current Test	26
15	Checking Main B+ Power Supply With the Aid of an External Meter	28
15A	Protection Circuit	32B
16	Slave Relay Protective Circuit	34
17	Adjustment of Upper Micro Switch	35
18	Replacement of Upper Micro Switch	37
19	Replacing Card Switch Solenoid	37
20	Voltage and Resistance Data - AN/USM-118A	38
20A	Voltage and Resistance Data - AN/USM-118B	38
20B	List of Calibration & Test Cards Furnished	38A
20C	Location of Tubes, Controls and Filter Condensers	38B
20D	Assembly Identification and Miscellaneous Parts	38B
20E	Power Supply Component Location	38C
20F	Power Supply Component Board	38C
20G	Main Function Switch	38D
20H	Card Switch Component Mounting Board	38D
20I	Auxiliary Function Switch - Outside View	38E
20J	Auxiliary Function Switch - Inside View	38E
20K	Short Test Assembly	38F
20L	Transformer Diagrams	38F
21	List of Calibration & Test Cards Furnished	39
22	Placement of Tubes, Controls and Filter Condenser	40
23	Assembly Identification and Miscellaneous Parts	41
24	Power Supply Component Location	42
25	Power Supply Component Board	43
26	Cardswitch Component Mounting Board	44
27	Auxiliary Function Switch - Inside View	45
28	Auxiliary Function Switch - Outside View	46
29	Main Function Switch	47
30	Short Test Assembly	48
1 of 4	Schematic Wiring Diagram AN/USM-118B	Back of Manual
2 of 4	Schematic Wiring Diagram AN/USM-118B	Back of Manual
3 of 4	Schematic Wiring Diagram AN/USM-118B	Back of Manual

LIST OF ILLUSTRATIONS (Cont)

Figure		Page
4 of 4	Schematic Wiring Diagram AN/USM-118B	Back of Manual
1 of 4	Schematic Wiring Diagram AN/USM-118A	Back of Manual
2 of 4	Schematic Wiring Diagram AN/USM-118A	Back of Manual
3 of 4	Schematic Wiring Diagram AN/USM-118A	Back of Manual
4 of 4	Schematic Wiring Diagram AN/USM-118A	Back of Manual

Figure 1. AN/USM-118 Electron Tube Test Set

TABLE OF CONTENTS

		Page
1.	GENERAL	1
2.	DESCRIPTION	
	A. General	2
	B. Description of Front Panel	2
	C. Auxiliary Compartment	4
	D. Program Cards	5
3.	CALIBRATION	6
4.	OPERATION	
	A. Normal	9
	B. Auxiliary Tests	10
	C. Hand Punch Card System	11
5.	CIRCUIT	
	A. Circuit Theory	12
	B. Circuit Description	21
6.	MAINTENANCE	
	A. General	24
	B. Complete Calibration	24
	C. Trouble Shooting Procedure	26
	D. Miscellaneous Adjustment Procedures	33
	E. Miscellaneous Parts Replacement	36

LIST OF ILLUSTRATIONS

SECTION 1 -- GENERAL

Figure		Page
1	Model AN/USM-118A Tube Tester	Frontspiece

SECTION 2 -- DESCRIPTION

2	Identification of Controls and Components	3
3	Auxiliary Compartment	4

SECTION 3 -- CALIBRATION

4	Meter Sensitivity	7

SECTION 4 -- OPERATION

5	Punching New or Replacement Tube Test Code Cards	11

SECTION 5 -- CIRCUIT

6	Test Circuits for Amplifying Tubes	14
7	Special Test Circuits	15
8	Basic Types of Diode Test Circuits	16
9	Voltage Regulator Test Circuits	17
10	Shorts and Cathode-to-Filament Leakage Test Circuit	18
11	Shorts and Cathode-to-Filament Leakage Test Circuit (Multi-Section Tube)	18
12	Interelement Shorts Identification	20

SECTION 6 -- MAINTENANCE

13	Signal Regulation and Amplitude Check	24
14	B+ Power Supply Feed Back Current Test	26
15	Checking Main B+ Power Supply With the Aid of an External Meter	28
16	Slave Relay Protective Circuit	34
17	Adjustment of Upper Micro Switch	35
18	Replacement of Upper Micro Switch	37
19	Replacing Card Switch Solenoid	37
20	Power Supply AN/USM-118A	38
21	List of Calibration & Test Cards Furnished	39
22	Placement of Tubes, Controls and Filter Condenser	40
23	Assembly Identification and Miscellaneous Parts	41
24	Power Supply Component Location	42
25	Power Supply Component Board	43
26	Card Switch Component Mounting Board	44
27	Auxiliary Function Switch - Inside View	45
28	Auxiliary Function Switch - Outside View	46
29	Main Function Switch	47
30	Short Test Assembly	48

Schematic Wiring Diagram - Sheet 1 of 4
Schematic Wiring Diagram - Sheet 2 of 4
Schematic Wiring Diagram - Sheet 3 of 4
Schematic Wiring Diagram - Sheet 4 of 4

Figure 1. Model AN/USM-118A Tube Tester

AN/USM - 118A-B

CARDMATIC TUBE TESTER

1. GENERAL

1.01 This instruction manual describes the AN/USM-118 Cardmatic Tube Tester and the methods for operating and maintaining the set.

1.02 The AN/USM-118 provides the necessary test sockets, circuitry, and test potentials necessary to test electron-tubes of the receiving and low power transmitting type.

1.03 The tube test conditions selected for the tube under test are as close as possible to the actual operating conditions encountered by the tube in its circuit application.

1.04 The tube test conditions are programmed on a punched code card system. A Cardmatic multiple switch automatically programs the tube test conditions when it is actuated with a code card.

1.05 The AN/USM-118 is manufactured by The Hickok Electrical Instrument Company, 10514 Dupont Avenue, Cleveland 8, Ohio.

1.06 The following is a list of units that make up the AN/USM-118 Electron Tube Test Set:

Test Set, Electron Tube	TS-1479/USM-118
* Card Kit, Tube Test Programming	MK-704/USM-118
Calibration Cell, Meter Circuit	MX-4712/USM-118

* Supplied only when specified in contract or order.

2. DESCRIPTION

A. General

2.01 The AN/USM-118 Electron Tube Test Set is self contained in a portable aluminum carrying case with removable cover. The outside dimensions of the case are approximately 19-1/2 inches wide by 9-1/2 inches high by 16-1/2 inches deep. The weight is about 50 pounds.

2.02 A card compartment is located in the front panel of the tester which can be used for storing the most frequently used program cards.

2.03 The cover of the tester case contains brief operating instructions, brackets for storing an instruction book, the power cord, a calibration cell for checking the meter and short test, calibration cards, 50 hand punch cards and a hand punch.

B. Description of Front Panel

2.04 The front panel is shown in Figure 2. The largest feature is the card switch which has a receptacle for receiving the program cards. When a pre-punched card is fully inserted into the switch it actuates a micro-switch which in turn actuates a solenoid to move the card switch contacts to complete the circuit. When the card switch actuates, the large knob at the left of it pops up. This PUSH TO REJECT CARD knob must be pressed to open the switch contacts and release the card. The card switch actuates only when a card is in the proper position and operates on the principle that absence of a hole in the card makes a contact.

2.05 The meter contains four scales. The upper scale is graduated from 0 to 100 for direct numerical readings. The three lower scales numbered 1, 2 and 3 are read for LEAKAGE, QUALITY and GAS respectively. Each numbered scale contains green and red areas marked GOOD and REPLACE.

2.06 Inside the small hood, directly in front of the meter, are five neon lamps which indicate shorts between tube elements.

2.07 A push button, marked 2, is used for transconductance, emission, and other quality tests which are described later. In general when this button is pressed, results are read on scale 2 of the meter.

2.08 Another button, marked 3, is used for making grid current measurements which result when gas is present in the tube vacuum. Results of this test are read on scale 3 of the meter. This button is interlocked with button 2.

2.09 A button marked 4 is used for tests of dual tubes in which both halves are alike. A neon lamp lights when button 4 is to be used.

2.10 Eleven sockets which will take all common tubes plus pin straighteners for the 7 and 9 pin miniature tubes are on the panel.

2.11 There is an ON-OFF spring-return toggle switch which turns the unit on by energizing a line slave relay, K101. A PILOT light appears next to this switch.

2.12 In the area above the ON-OFF switch there are five fuses. Three of these fuses are paired with neon lamps to indicate when they have blown. These three fuses protect portions of the circuit which are not protected by other means. The remaining two fuses protect both sides of the main power line.

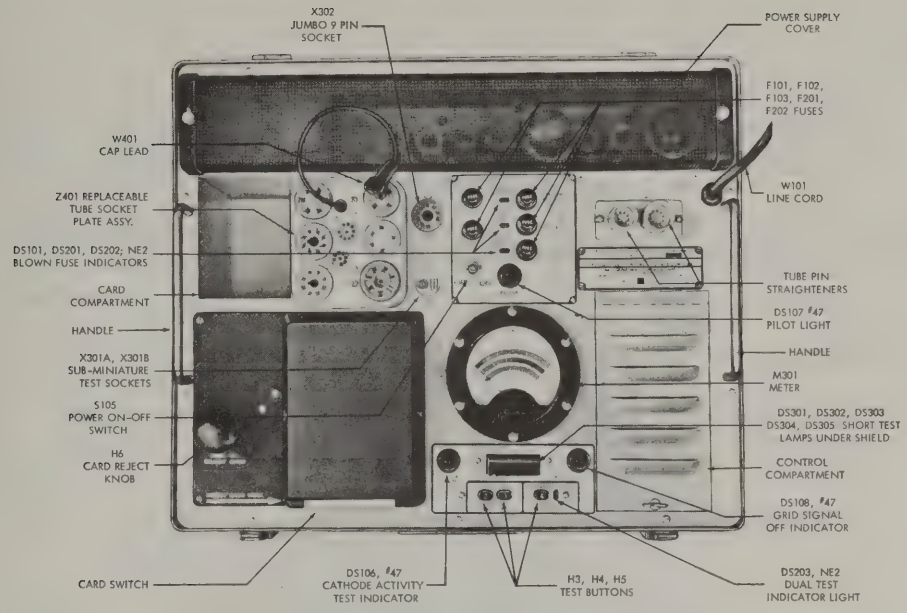

Figure 2. Identification of Controls and Components - AN/USM-118A

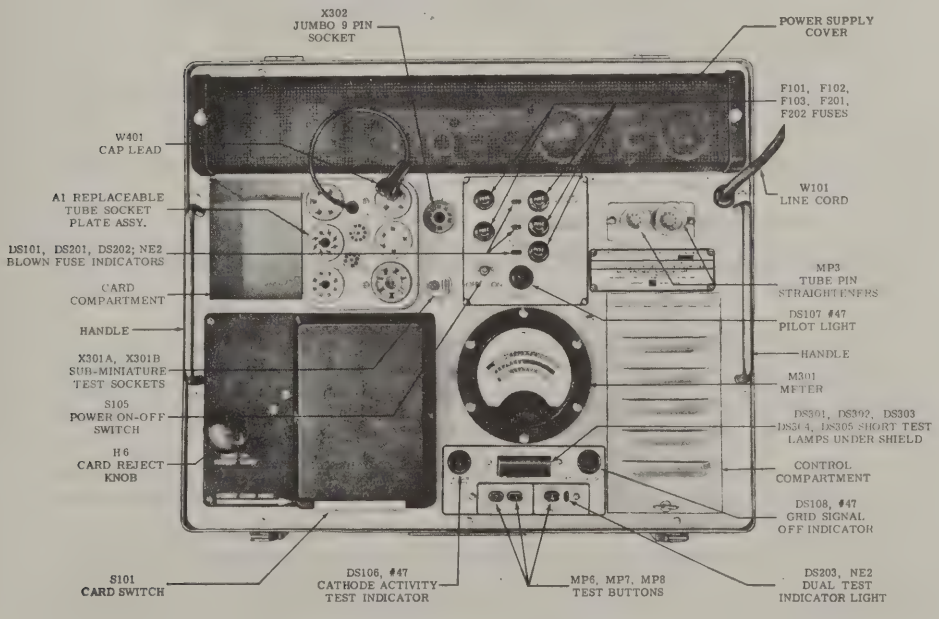

Figure 2A. Identification of Controls and Components - AN/USM-118B

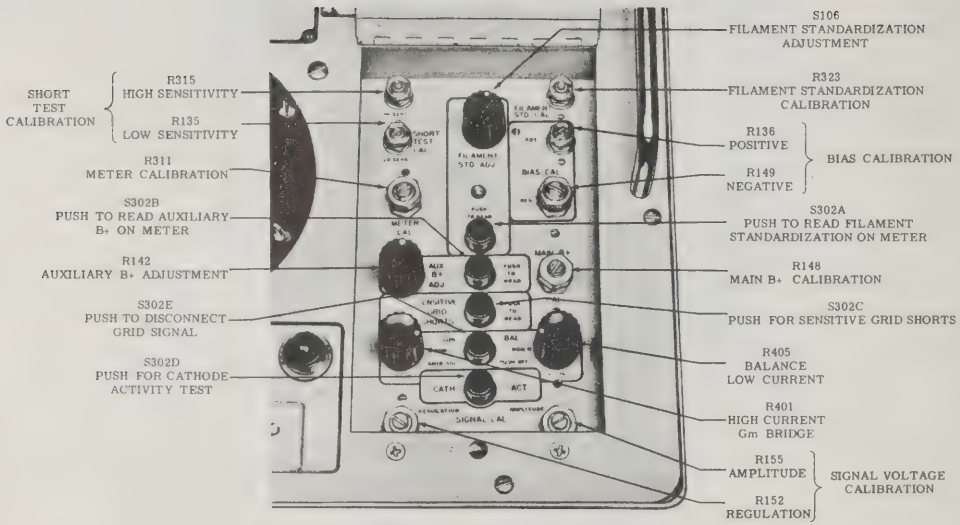

Figure 3 - Auxiliary Compartment

C. Auxiliary Compartment

2. 13 A hinged panel covers a group of auxiliary controls which are used for special tests and for calibration of the set.

2. 14 Two of these controls marked SIGNAL CAL. are used with special test cards for adjusting the REGULATION and AMPLITUDE of the signal voltage.

2. 15 A push button marked CATH ACT is used for making cathode activity tests. When this button is pressed the filament voltage is reduced 10 percent. Results of the test are read as a change in reading on the numerical meter scale. As a warning to the operator, when the CATH ACT button is pressed, a lamp on the main panel is lighted.

2. 16 A push button and two potentiometers are used for balancing the Gm bridge circuit under actual tube operating current for any Gm test. When the button is pressed it removes the grid signal and allows a zero balance to be made with one potentiometer or the other depending on whether the tube under test is passing HI or LO plate current. A lamp on the main panel is lighted when this adjustment is being made.

2. 17 A button labeled SENSITIVE GRID SHORTS is used for checking grid to cathode shorts at a sensitivity much higher than the normal tests. The results of this test are observed on the short test lamps.

2. 18 Certain special tests require the use of a continuously adjustable auxiliary power supply. By pressing the PUSH TO READ button the meter is used to monitor the voltage of the auxiliary power supply. This voltage may be adjusted by the use of the potentiometer labelled AUX B+ ADJ.

2.19 The rest of the potentiometer controls, marked MAIN B+ CAL, BIAS CAL NEG, BIAS CAL POS, FILAMENT STD CAL, METER CAL, SHORT TEST CAL, HI SENS, SHORT TEST CAL LO SENS, are calibration controls and are adjusted by the use of special calibration cards and a calibration cell, as covered in the section on routine calibration and also the maintenance section of this book.

2.20 The line voltage to the tester may vary over a wide range. To correct for this, a button is pressed and the FILAMENT STD ADJ switch is rotated until the meter reads midscale.

D. Program Cards

2.21 The circuitry in the tester which is to be utilized is selected by a pre-punched card. These cards are made of mylar.

2.22 The card switch in the tester has 186 single pole single throw switches. These are arranged in 17 rows with 11 switches in each row. The program card is used to push the switches closed and therefore the absence of a hole in the card is required to actuate a switch.

2.23 The tube numbers are printed on the tabs of the cards. For convenience in the filing system the tube number is also printed at the edge of the card.

2.24 The cards are arranged in alpha-numerical order in the test compartment. A special card is provided to be used as a marker when a card is removed for use.

2.25 A pack of 53 calibration cards is supplied for use in trouble shooting and complete calibration of this equipment.

2.26 A pack of printed blank cards and a hand punch are provided so that additional tube test cards may be punched as new tubes are developed. Torn, broken or unserviceable cards may be replaced or duplicated with the hand punch and blank cards.

3. CALIBRATION

3.01 General. The tester is equipped with self-calibrating features which include calibration controls located in the auxiliary control compartment and corresponding calibration code cards. The calibration procedures are divided into two parts, Routine Calibration, listed below, and Complete Calibration, listed in the Maintenance Section.

3.02 Routine Calibration is quickly performed using the proper calibration cards and does not require external test equipment. It should be performed upon initial installation, and weekly thereafter.

3.03 Complete Calibration is also performed with the use of special calibration cards, however, additional test equipment is required for some of the checks.

3.04 The complete calibration may be performed at the time of installation, (in addition to Routine Calibration noted above), and should be checked monthly and whenever trouble is suspected or maintenance work has been performed.

3.05 Routine Calibration Procedure.

a. Turn tester on and allow it to warm up for 25 minutes. Check that the meter is reading zero. If necessary, re-adjust the mechanical zero adjust so that the needle knife-edge rests over the zero line.

b. Select the Routine Calibration Cards, #1 through #10, from the tester case cover.

3.06 Meter Check.

a. Insert calibration card #1, METER, into the switch. Plug the calibration cell into the octal test socket, see figure 4. (The calibration cell is normally stored in the cover of the tube tester.) The left short lamp will glow.

b. Press button #2 for check of meter microamp cal. The meter should read within ± 1 division of the figure written in the top blank on the calibration cell cover. If the reading is out of tolerance the meter should be checked against a meter standard for 50 μamp indication at mid-scale. If the error is significant, the meter should be repaired or replaced.

c. Hold down button #2 and press button #4 to check meter millivolt sensitivity. The meter should read within ± 1 division of the figure written in the bottom blank on the calibration cell cover. If the reading is out of tolerance, adjust the "METER CAL" control for proper reading.

NOTE: Routine Calibration Controls are located in the auxiliary control compartment. If the control has a locking nut, its setting should be rechecked after the nut is tightened.

IMPORTANT: To insure accuracy the calibration cell should be returned to an authorized repair facility for check or replacement at least once every 12 months.

3.07 Short Test Sensitivities.

DURING THE FOLLOWING FOUR TESTS (CARDS #2 THRU #5) LEAVE THE CALIBRATING CELL IN THE OCTAL SOCKET. DO NOT PRESS ANY BUTTONS.

a. Insert Calibration Card #2, SHORTS 2 MEG NO-GO. Observe that no short lamps are lighted. If any lamps are glowing adjust "LO SENS" short test control to just extinguish all lamps.

2.19 The rest of the potentiometer controls, marked MAIN B+ CAL, BIAS CAL NEG. BIAS CAL POS, FILAMENT STD CAL, METER CAL, SHORT TEST CAL, HI SENS, SHORT TEST CAL LO SENS, are calibration controls and are adjusted by the use of special calibration cards and a calibration cell, as covered in the section on routine calibration and also the maintenance section of this book.

2.20 The line voltage to the tester may vary over a wide range. All circuits in the tester are electronically regulated except the filament supply. To correct for this, a button is pressed and the FILAMENT STD ADJ switch is rotated until the meter reads midscale.

D. Program Cards

2.21 The circuitry in the tester which is to be utilized is selected by a pre-punched card. These cards are made of a tough vinyl plastic material.

2.22 The card switch in the tester has 186 single pole single throw switches. These are arranged in 17 rows with 11 switches in each row. The vinyl card is used to push the switches closed and therefore the absence of a hole in the card is required to actuate a switch.

2.23 The tube numbers are printed in color on the tabs of the cards. For convenience in the filing system the tube number is also printed at the edge of the card.

2.24 The cards are arranged in alpha-numerical order in the test compartment. A special card is provided to be used as a marker when a card is removed for use.

2.25 A pack of calibration cards is supplied for use in routine calibration of this equipment. Another pack of cards is included for use in trouble shooting and complete calibration.

2.26 A pack of printed blank cards and a hand punch are provided so that additional tube test cards may be punched as new tubes are developed. Torn, broken or unserviceable cards may be replaced or duplicated with the hand punch and blank cards.

3. CALIBRATION

3.01 General. The tester is equipped with self-calibrating features which include calibration controls located in the auxiliary control compartment and corresponding calibration code cards. The calibration procedures are divided into two parts, Routine Calibration, listed below, and Complete Calibration, listed in the Maintenance Section.

3.02 Routine Calibration is quickly performed using the proper calibration cards and does not require external test equipment. It should be performed upon initial installation, and weekly thereafter.

3.03 Complete Calibration is also performed with the use of special calibration cards, however, additional test equipment is required for some of the checks.

3.04 The complete calibration may be performed at the time of installation, (in addition to Routine Calibration noted above), and should be checked monthly and whenever trouble is suspected or maintenance work has been performed.

3.05 Routine Calibration Procedure.

a. Turn tester on and allow it to warm up for 25 minutes. Check that the meter is reading zero. If necessary, re-adjust the mechanical zero adjust so that the needle knife-edge rests over the zero line.

b. Select the Routine Calibration Cards, #1 through #10, from the tester case cover.

3.06 Meter Check.

a. Insert calibration card #1, METER, into the switch. Plug the calibration cell into the octal test socket, see figure 4. (The calibration cell is normally stored in the cover of the tube tester.) The left short lamp will glow.

b. Press button #2 for check of meter microamp cal. The meter should read within ± 1 division of the figure written in the top blank on the calibration cell cover. If the reading is out of tolerance the meter should be checked against a meter standard for 50 μamp indication at mid-scale. If the error is significant, the meter should be repaired or replaced.

c. Hold down button #2 and press button #4 to check meter millivolt sensitivity. The meter should read within ± 1 division of the figure written in the bottom blank on the calibration cell cover. If the reading is out of tolerance, adjust the "METER CAL" control for proper reading.

NOTE: Routine Calibration Controls are located in the auxiliary control compartment. If the control has a locking nut, its setting should be rechecked after the nut is tightened.

IMPORTANT: To insure accuracy the calibration cell E2 should be returned to an authorized repair facility for check or replacement at least once every 12 months.

3.07 Short Test Sensitivities.

DURING THE FOLLOWING FOUR TESTS (CARDS #2 THRU #5) LEAVE THE CALIBRATING CELL IN THE OCTAL SOCKET. DO NOT PRESS ANY BUTTONS.

a. Insert Calibration Card #2, SHORTS 2 MEG NO-GO. Observe that no short lamps are lighted. If any lamps are glowing adjust "LO SENS" short test control to just extinguish all lamps.

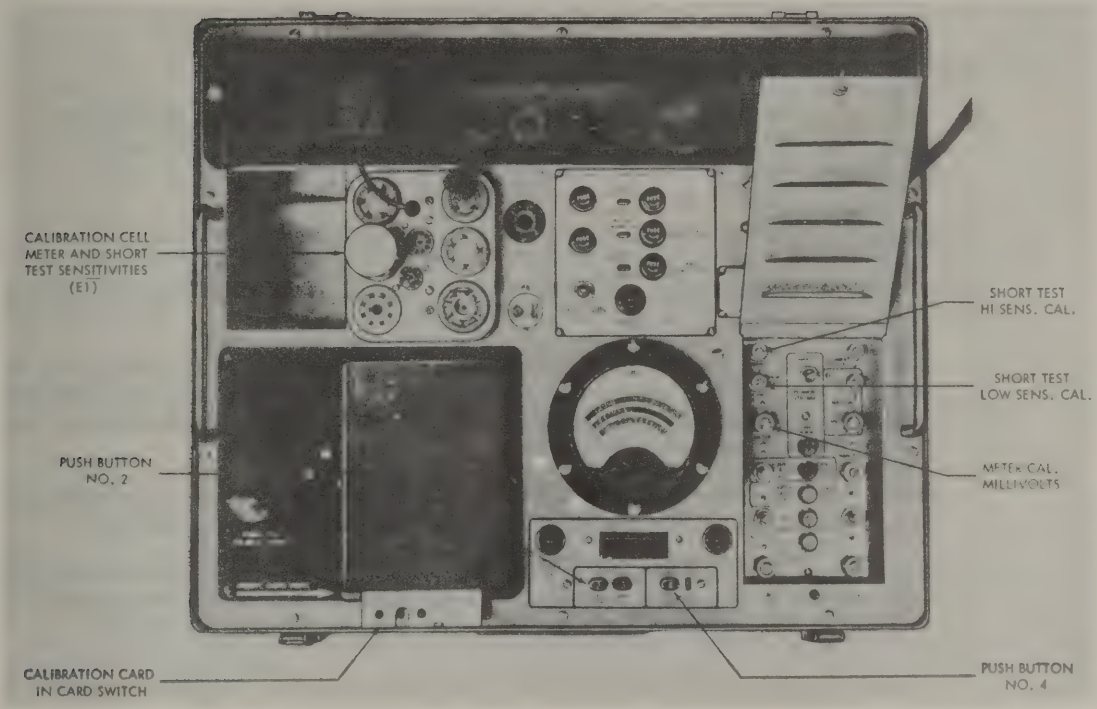

Figure 4 - Meter Sensitivity

b. Insert Card #3, SHORTS 1 MEG GO. The left four lamps should glow. If they are not glowing re-adjust the "LO SENS" control until they glow with Card #3 and are extinguished with Card #2, as listed above.

c. Insert Card #4, SHORT 20 MEG NO-GO. Press SENSITIVE GRID SHORTS button located in the Auxiliary Compartment (See Figure No. 3). No short lamps should glow. (If any are lighted adjust the "HI SENS" control).

d. Insert Card #5, SHORT 10 MEG GO. Press SENSITIVE GRID SHORTS button located in the Auxiliary Compartment (See Figure No. 3). The number 4 lamp only (counting left to right) should glow.

NOTE: The Lamp may flicker or glow dimly as compared to the "LO SENS" short indication. If the number four lamp is not glowing re-adjust the "HI SENS" control until it glows with card #5 and is extinguished with card #4, as before.

REMOVE CALIBRATION CELL FROM OCTAL SOCKET.

3.08 Bias Calibration.

a. Insert Card #6, FIXED BIAS CAL NEG. No short lamps should glow. Press button #2. Meter should read half scale. If reading is other than half scale, adjust "BIAS CAL NEG" control for proper indication.

b. Insert Card #7, FIXED BIAS CAL POS. Short lamps 1 and 2 should glow. Press button #2. Meter should read half scale. If another reading is obtained, adjust "BIAS CAL POS" control.

.09 Main B+ Power Supply Calibration.

a. Insert Card #8, MAIN B PLUS CAL. Short Lamps 1, 2, 3 and 5 should glow. Press button #2. The meter should read half scale. If meter reading is not proper, adjust MAIN B+ CAL for correct indication.

.10 Gm Bridge Balance.

Check that the white dots on the Gm BAL HI Ib and LO Ib knobs are in line with the associated dots labeled NOM (Nominal) on the panel.

a. Insert Card #9, GM BAL LOW IB. Press button #2. Meter should read zero, +5 divisions or minus the equivalent of 5 divisions. If the reading is out of tolerance the LO Ib control may be adjusted for a zero reading and the knob re-set on the control shaft to properly align the dots.

NOTE: The balance adjustments are somewhat subject to temperature variation and the tester should be completely warmed up prior to these adjustments.

b. Insert Card #10, GM BAL HI IB. Press button #2. The meter should read zero, + 5 divisions or minus the equivalent of 5 divisions. If the reading is out of tolerance the HI Ib control may be adjusted in manner noted for LO Ib above.

3.11 Meter Protection Circuit, AN/USM-118B

In order to insure proper operation of the meter protection circuit over the required range of temperatures, the following adjustments are necessary.

a. Remove the tester from the case and allow 15 minutes warm-up time.

NOTE: R171 (Q2 base adjust resistor, located on the power supply chassis) may be set so that the tester will not turn on. If this is the case adjust R171 so that the tester stays on.

b. Make all adjustments at normal room temperature with 115 VAC input.

c. With a 20,000 ohms-per-volt voltmeter connected across R167 (Figure 26) (positive lead connected to the junction of the emitter of Q2 and R167), adjust R171 for a voltmeter reading of 0.45 volts ±0.01 volts.

d. Remove the positive lead of the voltmeter from R167 and connect it to the junction of the collector of Q1, R163, and C113. Adjust R164, (Figure 22) for a voltmeter reading of 4.5 volts ± 0.1 volt.

e. Tighten the locking nuts on R164 and R171, then recheck the voltages just measured.

4. OPERATION

A. Normal

4.01 Before operating this set the calibration procedure, as outlined in Section 3.0 should be followed.

4.02 The tester is equipped with a three-conductor power cord, one wire of which is chassis ground. It should be plugged into a 105-125 volt 50 to 400 cycle outlet having a building ground.

4.03 Open the auxiliary compartment trap door and check for the following to be in the NOM position:

FILAMENT STD. ADJ. knob
GM BAL - 2 knobs. GRID SIG. button should be up, no red light at GRID SIGNAL OFF lamp.
CATH ACT - Button up and no red light at CATHODE ACTIVITY TEST lamp.

All other controls in this compartment should be left as is.

4.04 Turn on the tester and allow it to warm up for 5 or 10 minutes. This tester may be left on for extended periods without harm. Some heat will be noted from the ventilated section at the rear but this is normal.

4.05 Press PUSH TO REJECT CARD knob down until it locks and remove the non-test card from the switch. This card is used to keep the switch pins in place during the shipment and should be inserted before transporting the tester.

4.06 Plug the tube to be tested into its proper socket. Pin straighteners are supplied for 7 and 9 pin miniature tubes and should be used before these tubes are plugged in.

4.07 The tester is shipped with calibration cards and handpunch cards in its case. Cards for tubes are obtained separately. It is important that cards be kept in their proper order. A yellow plastic flag is provided to be used as a bookmark when cards are removed. It is expected that different locations may want to add more markers to separate card groups or to intermix card groups in the tester case. However, this should be done with care so that other operators will not be confused. Probably it would be best to use the tester a few months before any refiling is done.

4.08 Select the proper card (or cards) for the tube to be tested. Insert the selected card into the slot in the card switch until the card switch is actuated. This is indicated when the PUSH TO REJECT CARD knob pops up.

NOTE: The card will operate the tester only when it is inserted properly, that is, when the printing is up and toward the operator. Never put paper or objects other than program cards into the card switch as they may jam the switch contacts. If the overload relay shuts off the tester when the program card actuates the card switch, check to make sure that the proper card is being used or if the tube under test has a direct interelectrode short.

Once the card switch has been actuated the tube under test is automatically subjected to an interelement shorts test and a heater to cathode leakage test. A blinking or steady glow of any of the short test lamps is an indication of an interelement short. If the short test lamps remain dark, no interelement shorts exist within the tube under test. If an interelement short exists between two or more elements, the short test lamp or lamps connected between these elements will remain dark and the remaining lamps will light. The abbreviations for the tube elements are located on the panel just below the short test hood so that the neon lamps are between them, making it possible to determine what elements are shorted. For example, if all the lamps were lighted except the right hand one it would indicate a grid to cathode short. If only the left hand

lamp is lighted it indicates a plate to cathode short. Heater to cathode shorts are indicated as leakage currents on the number 1 meter scale. If the meter reads above the green area the tube should be replaced. A direct heater to cathode short would cause the meter to go full scale.

4.09 The tube is now ready for the QUALITY test. This may be for transconductance, emission, plate current, voltage drop, etc., depending on the type of tube being tested. Push the number 2 button and read the number 2 meter scale which tells whether or not the tube is good. The actual Gm or milliampere reading can be interpreted with the aid of the TUBE TEST CONDITIONS booklet which is shipped with the tester. When the number 2 button is pressed the numerical meter scale may be read as a percentage of full scale. By referring to the booklet for the full scale reading the actual Gm can be determined. For example, if a tube read 70 and the booklet listed its full scale reading as 6800 umhos, the actual reading would be 70% of 6800 or 4760 umhos. Of course the reading for rectifiers and diodes would be interpreted in milliamperes instead of micromhos.

4.10 The tube may be checked for gas by pressing the number 3 button and reading the number 3 meter scale. The number 2 button also goes down when 3 is pressed.

4.11 If a tube such as a dual diode or dual triode which has two identical sections is being tested, the neon lamp next to the number 4 button will light. This lamp tells the operator that he may check both sections with one card. To do this the operator checks the tube for shorts, leakage, quality and gas which takes care of one section. He then holds down button 4 and repeats the checks for shorts, leakage, quality and gas on the second section.

4.12 Some tubes require more than one card. For example, a tube having dual diode sections and a triode section would have two cards, one for the triode and one to be used with button 4 for checking the diodes. If the two diode sections were not alike the tube would take three cards and the lamp by button 4 would not light. Some tubes have more than one card so that special tests may be made. Commercial voltage regulator tubes have four cards. The first card is an instruction card. The second card is for the dark current test or the point just below firing when the tube is at the maximum leakage point. Button 2 is pressed for this test but leakage is still read on the number 1 meter scale. Card 3 is the low current test. It flows minimum current through the tube and measures the voltage across the tube. Card 4 is the high current test. It flows maximum current through the tube and measures the voltage across the tube. The difference between the readings with cards 3 and 4 indicates the regulation ability of the tube. The closer the readings, the better the regulation.

B. Auxiliary Tests

4.13 As seen from the foregoing paragraphs the normal testing procedure is extremely simple. All that is necessary is to insert the card, check shorts and leakage and then press two buttons and take readings. However, there are other tests which can be made. Controls for these are located in the auxiliary compartment. This compartment has been described in paragraphs 2 and 3 in detail. For testing tubes the only controls used are the five push buttons and the four knobs associated with them. Actually two of these (FILAMENT STD. ADJ. and Gm BAL.) are not really tests but are controls to obtain more accurate test results.

4.14 The FILAMENT STD. ADJ. controls the primary side of the filament transformer. It is used to compensate for variations in line voltage and for variations caused by tubes having large filament currents. For all tubes the white dot on the knob may be aligned with the dot labelled NOM. and left there. However, when the operator wishes to obtain very accurate tests the filament voltage may be standardized for every tube. To do this the PUSH TO READ button is held down and the knob is rotated until the meter reads as close to 50 as possible. When the operator has finished testing tubes, he should restore the knob to NOM.

4.15 The complete adjustment of the Gm bridge balancing controls is described in 3.0. To obtain the most accurate results, the balance should be checked every time a tube is tested for Gm. To do this press button 2 and the GRID SIG. button. The GRID SIGNAL OFF lamp on the tester panel will light. Adjust the LO Ib or HI Ib knob until the meter reads as near zero as pos-

sible. Most tubes require the adjustment of the LO Ib knob, however, tubes that draw heavy plate current require the adjustment of the HI Ib knob. After completing the check, restore the GRID SIG. button to normal by pressing any black button in the auxiliary compartment. When the operator is finished testing he should return both balance knobs to their NOM. positions.

4.16 The cathode activity test is used as an indication of the amount of useful life remaining in the tube. By reducing the filament voltage ten percent and allowing the cathode to cool off slightly the ability of the cathode as an emitter of electrons can be estimated. This test is made in conjunction with the normal quality test. After the tube has warmed up button 2 is pressed and the test meter is read on scale 2; also the numerical reading on the 0-100 scale is noted. The CATH. ACT. button is then locked down. A red light on the tester panel comes on. After a wait of about 1-1/2 minutes button 2 is again pressed and the reading taken on the numerical scale. The tube should be rejected if this reading differs from the normal reading by more than 10 percent or if the reading drops into the red area on scale 2. After this test the button should be restored to normal by pressing any black push button in the auxiliary compartment.

4.17 It is often desirable to check tubes for shorts between grid and cathode at a sensitivity greater than normal. This is especially true for tubes used in oscilloscopes and television sets. To make this check merely press the SENSITIVE GRID SHORTS button and note carefully if any of the shorts lamps light.

4.18 The remaining control in the auxiliary compartment is the auxiliary B+ adjustment. This control varies the voltage of the auxiliary regulated supply. This supply is only used on special test cards such as for Western Electric cold cathode and voltage regulator tubes.

C. Hand Punch Card System

4.19 The Hickok hand punch card system consists of fifty printed blank cards, and one steel hand punch. Additional cards may be ordered under the Hickok Part No. 3122-80.

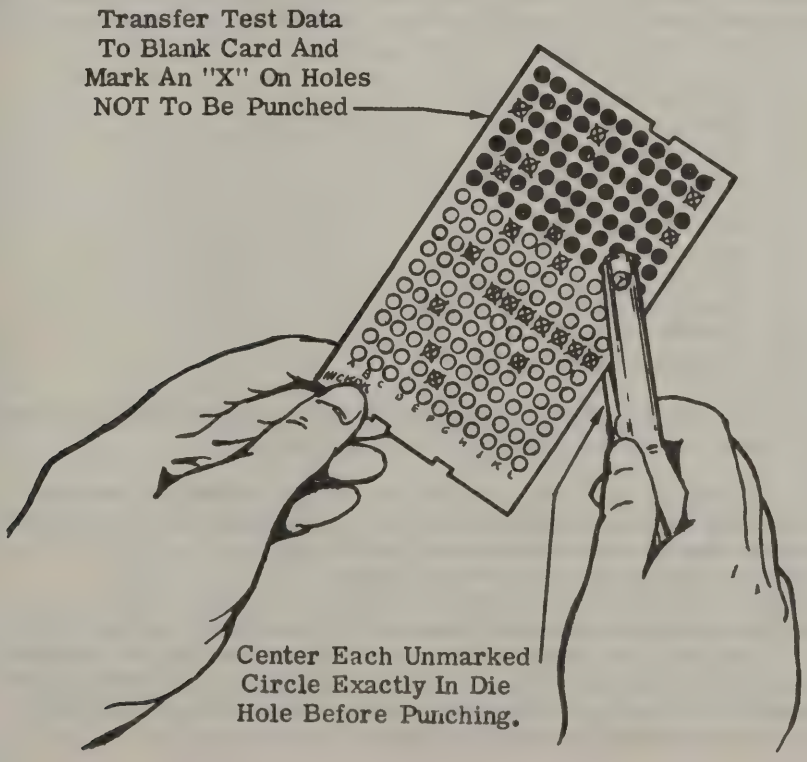

Figure 5 - Punching New or Replacement Tube Test Code Cards

4.20 Preparation of Cards: The Hickok CARDMATIC switch is designed so the unpunched areas in a test card close the contacts. Therefore, all the circles are punched in the card except the ones that close circuit switches.

a. Transfer the test data to the blank card and mark an "X" on the circles not to be punched.

b. A convenient way to locate the correct circles on the card is to find the desired lettered row and mark the circles that are not to be punched in that lettered row.

4.21 Punching the Card: Locate the unmarked circle exactly in the die hole of the hand punch and punch the hole.

4.22 Replacing Broken Cards:

a. Place the parts of the broken card over a blank card and mark the holes to be punched.

b. Center the marked circles in the die hole of the hand punch and punch the holes.

5. CIRCUIT

A. Circuit Theory

5.01 Previous testers have checked tubes with circuits which were fixed in nature. When a tube having characteristics different from any other was developed it was necessary to test it on a compromise type circuit. In this tube tester an effort has been made to include enough separate circuits so that by interconnecting them, nearly any tube may be tested for nearly any condition. The feature which makes this possible is the card switch with its 186 contacts. This switch may be thought of as a group of patch cords to interconnect a group of laboratory components. This group of components contains the following:

1. 1% R box - high current
2. 1/4% meter
3. 1% meter shunt system
4. Black box - direct reading Gm
5. Fixed bias supply - 1%
6. Regulated B+ supplies
7. AC supplies
8. Decade filament supplies
9. Regulated signal
10. A group of capacitors
11. Unregulated B+ Supply

5.02 The card switch connects these components in nearly any configuration rather than following a fixed circuit pattern. Its functions are mainly as follows:

It applies the properly established voltages to the various pins of the tube sockets.
It chooses a high wattage decade resistance from 0 to 70,000 ohms, in 10 ohm steps
It places certain fixed capacitors into the desired point in the circuits
It puts the Gm bridge into the proper point of the circuit
It connects the regulated signal of 222 millivolts
It chooses half-scale meter shunts capable of resolving at mid-scale, Gm's of 250 to 13,000 micromhos in 50 micromho steps; 250 to 64,000 micromhos in 250 micromho steps; currents from 50 to 2600 microamps in 10 microamp steps; and from 1 to 255 milliamps in one milliamp steps; or voltages from 5 to 260 volts in one volt steps.
It places the meter and its shunts at the proper point of the test circuit.

4. 23 Directions for use of Full Wave and Half Wave Output Current Test Correction Curves. The purpose of the following instructions is to correct quality readings of rectifiers at other than nominal (115 volt) line voltages.

a. Insert test card into cardswitch. Do NOT insert tube to be tested in the test socket.

b. Depress the filament standardization PUSH TO READ pushbutton in the auxiliary control compartment.

c. Adjust the FILAMENT STD. ADJ. control for minimum indication on the meter and note this value.

d. Insert the tube to be tested into the test socket and perform the test in the usual manner. Be sure to standardize the filament of the tube under test in accordance with paragraph 4. 14.

e. Use the correction curve (Figure 5A) to find the intersection of the minimum value obtained in step c above and the quality reading obtained in step d.

f. Corrected readings are given as the radial line passing through the point defined by the intersection found in step e.

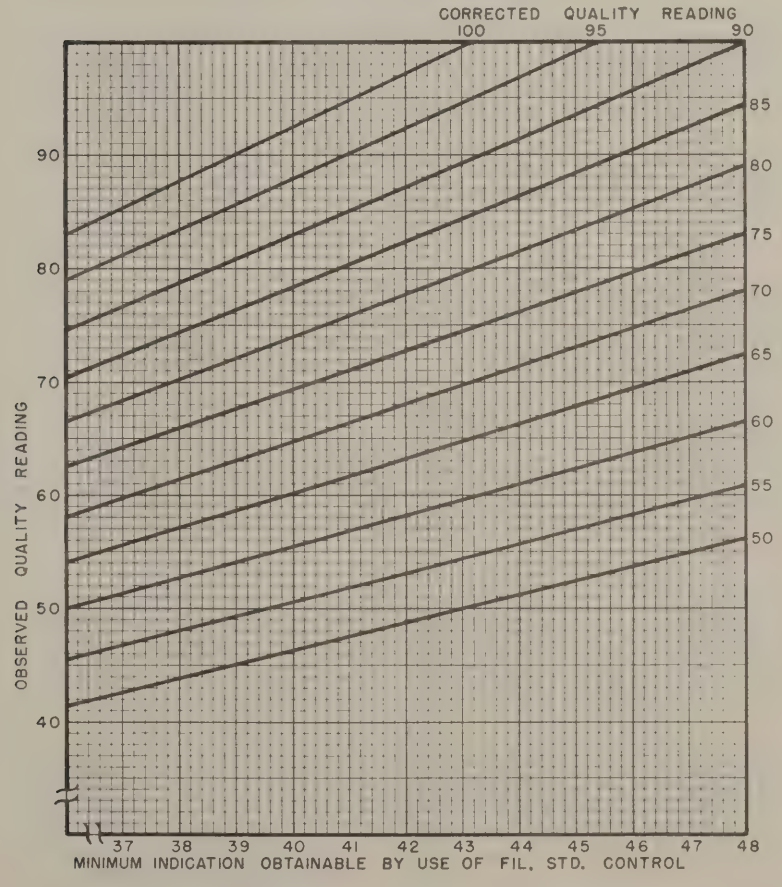

Figure 5A. Curve for Correcting Full-Wave and Half-Wave Rectifier Output Current Tests to Nominal (115 Volts) Line Value

4. 24 Accuracy. This tester is capable of measuring mutual conductance of receiving type electron tubes to within a basic tolerance of 3 percent. Due to the inherent linear decrease in the mutual conductance reading as plate current increases, the correction factor listed in Figure 5B should be applied to maintain the 3 percent tolerance on Gm.

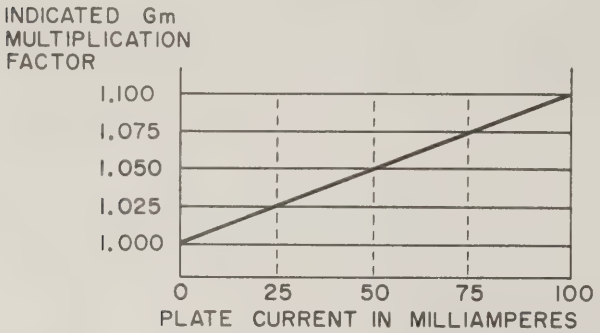

Figure 5B. Gm Correction Factor Chart

It applies a high current, 500 volts AC supply, to the proper point of the test circuit.
It applies a regulated DC supply to the proper point in the circuit and selects its voltage from 10 to 250 volts in 10 volt steps.
It applies an unregulated 350 volt DC supply to the proper point of the test circuit.
It controls a decade fixed bias supply for bias voltages from 0 to 100 volts in 0.1 volt steps.
It chooses a decade ac filament voltage from 0 to 119.9 volts in 0.1 volt steps.
It chooses a decade dc filament voltage from 0 to 50 volts in 0.1 volt steps.

5.03 In this tester an effort has been made to test tubes under typical operating conditions and values recommended by tube handbooks. Instead of only Gm and emission tests being used, variations have been added to compliment them. Some examples of how the circuit selection system is used in testing various types of tubes are explained in the following paragraph.

5.04 The amplifying type tubes, which are those having control grids, are tested for Gm. Most of these are in the triode and pentode groups. Triodes are usually operated in either a fixed bias or self-bias circuit. Figure 6 illustrates that for triode fixed bias types the cathode is ground. The negative bias plus a small A.C. signal is added and applied to the grid. The plate of the tube is connected to one end of the Gm bridge circuit with the regulated DC or B+ connected to the other end. This circuit is set up by the card in the card switch and by pressing button 2 it is energized for the test.

Figure 6 shows that the triode self bias test resembles the fixed bias test except that the cathode is grounded through the biasing resistance which is shunted by a capacitor.

5.05 By referring to Figure 6 it is noted that pentodes are tested the same as triodes except for the addition of the screen and suppressor grids. In both cases the screen voltage is connected just before entering the Gm circuit. In fixed bias operation the suppressor grid is grounded directly while in the self bias case it is connected to the cathode.

5.06 Figure 7 shows a two-control grid type of heptode. In testing this tube the bias voltage is applied to each control grid but the signal is only applied to one at a time, which then makes a measurement of the respective grid to plate Gm. Two test cards are necessary for this type of tube.

5.07 Power pentodes used in pulse applications are given a normal Gm test but in addition receive a second test which is referred to as a "knee" test. In order to produce the necessary pulse power the plate current of these pentodes must sweep from near cut-off to full saturation at the knee of the plate current-plate voltage curves. The Gm test is important but the knee test is necessary for a complete check. The "knee" test circuit is shown in Figure 7.

5.08 Figure 7 shows two special tests that are made for triodes intended for computer application. In addition to the normal Gm test these tubes are normally tested for zero bias plate current (ON test) and for high bias plate current (OFF test). Since these tubes are intended for multivibrator application it has been found necessary to make these tests to assure proper operation.

5.09 DC Filament Tubes. Certain battery-operated tubes have directly heated or filamentary cathodes. These are tested the same as triodes or pentodes except in certain cases dc from the full wave silicone rectifier bridge is applied to the filament of the tube. Should shorts occur in this type of tube, the meter will deflect to the left under the leakage test. This can be disregarded as the shorts lamps will actually show the defect.

5.10 Diode type tubes are tested with several different circuits depending on the type of diode tested. In the full wave rectifier circuit shown in Figure 8, the 250 volt center tapped ac is applied directly across the plates of the tube. A load resistance with filter capacitor is connected to the cathode of the tube. The output current is measured by the meter being connected as a dc milliammeter. The load resistor is adjusted so that the average indicated current or emission will be for the handbook condition.

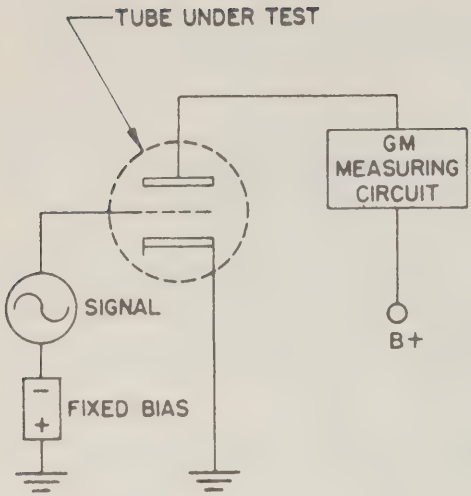

FIXED-BIAS GM TEST CIRCUIT

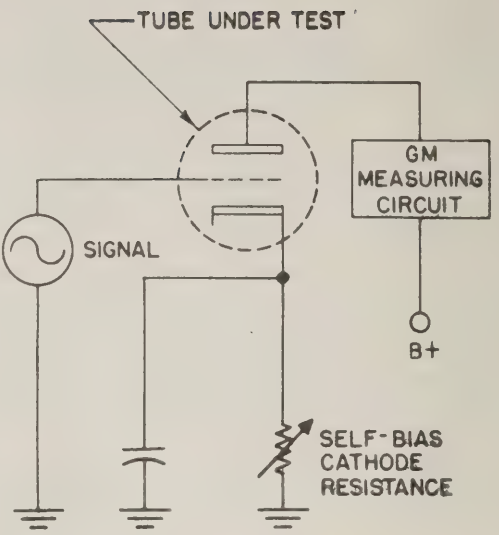

SELF-BIAS GM TEST CIRCUIT

TRIODE TEST CIRCUITS

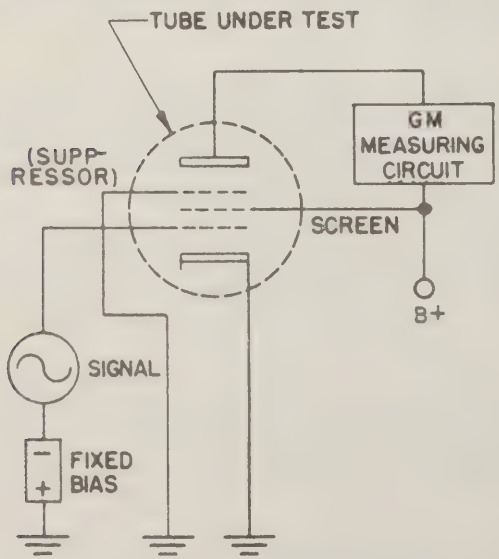

FIXED-BIAS GM TEST CIRCUIT

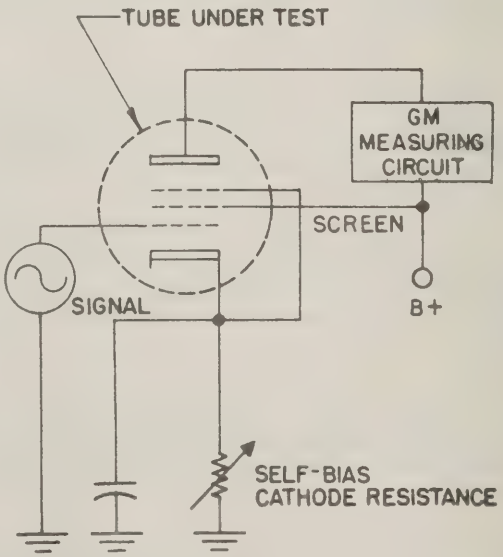

SELF-BIAS GM TEST CIRCUIT

PENTODE TEST CIRCUITS

Figure 6 - Test Circuits for Amplifying Tubes

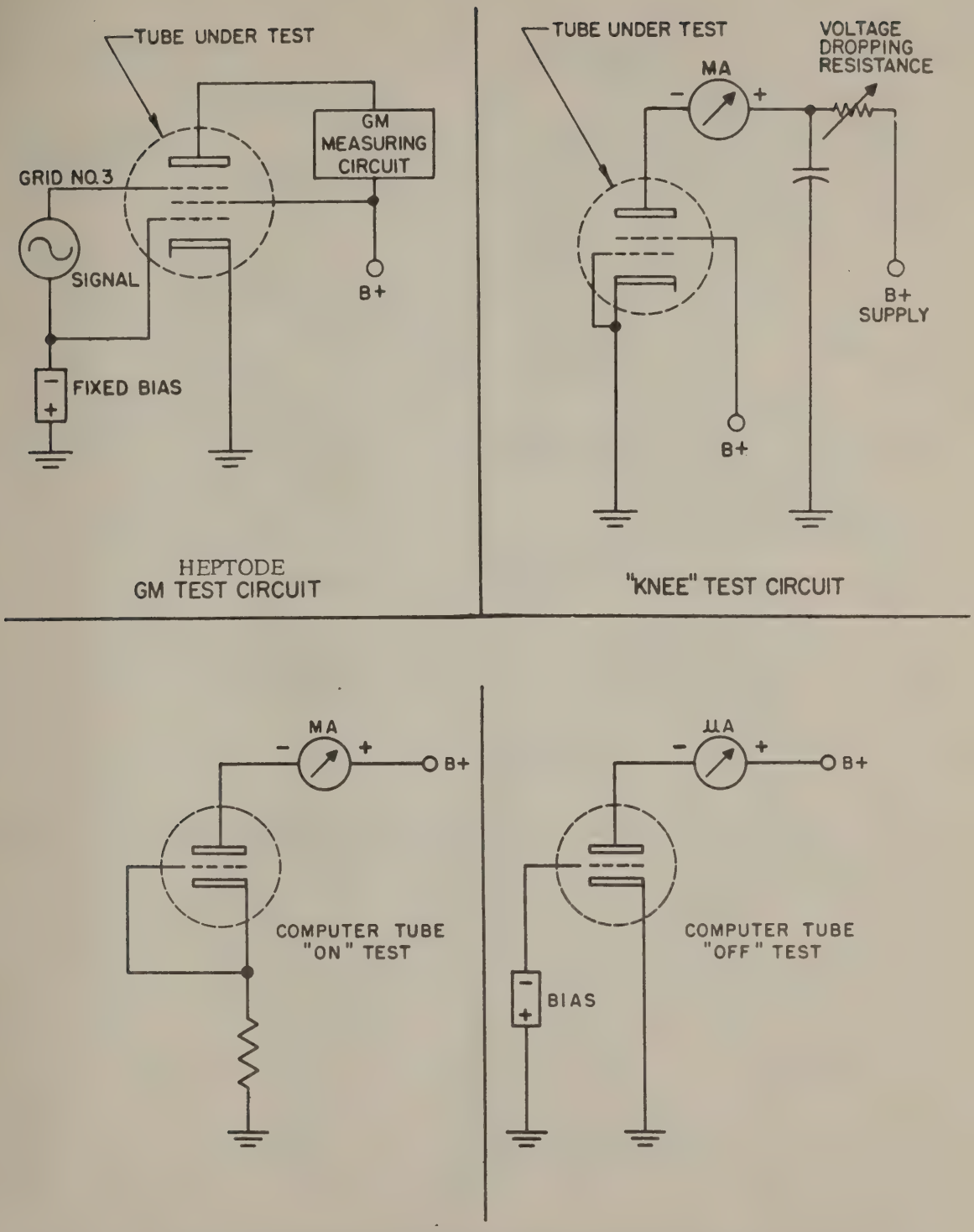

Figure 7 - Special test Circuits

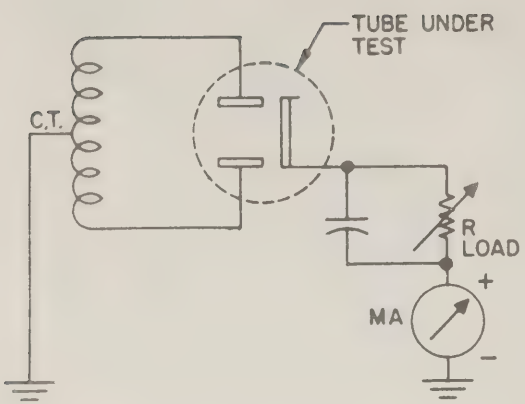

Full Wave Rectifier Test Circuit

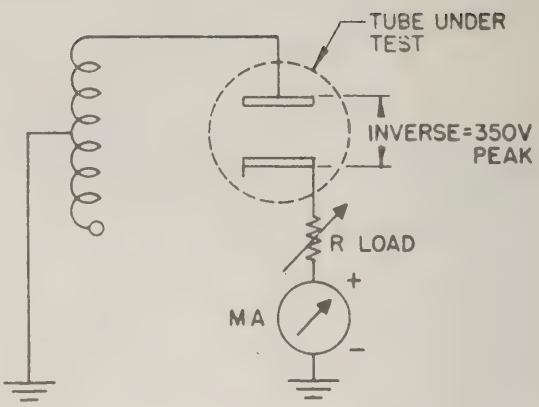

Half Wave Rectifier Test Circuit

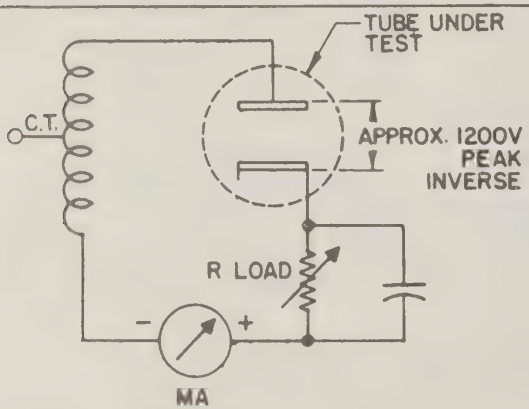

High Voltage Rectifier Test Circuit

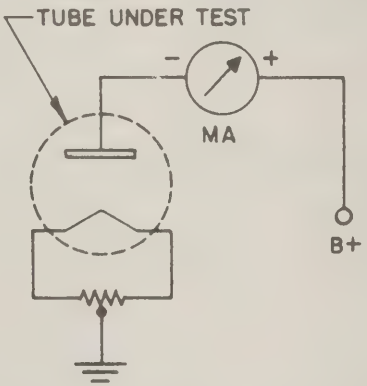

High Voltage Diode Test Circuit

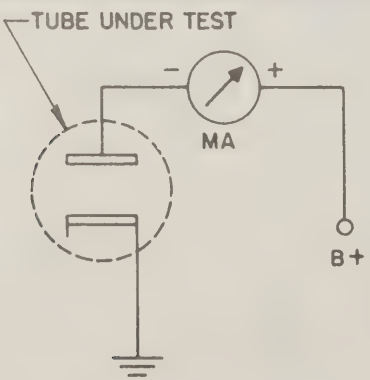

High Perveance Diode Test Circuit

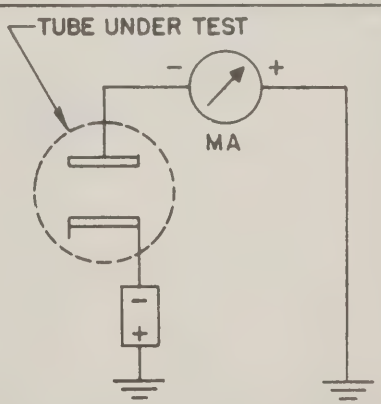

Low Perveance Diode Section Test

Figure 8 - Basic Types of Diode Test Circuits

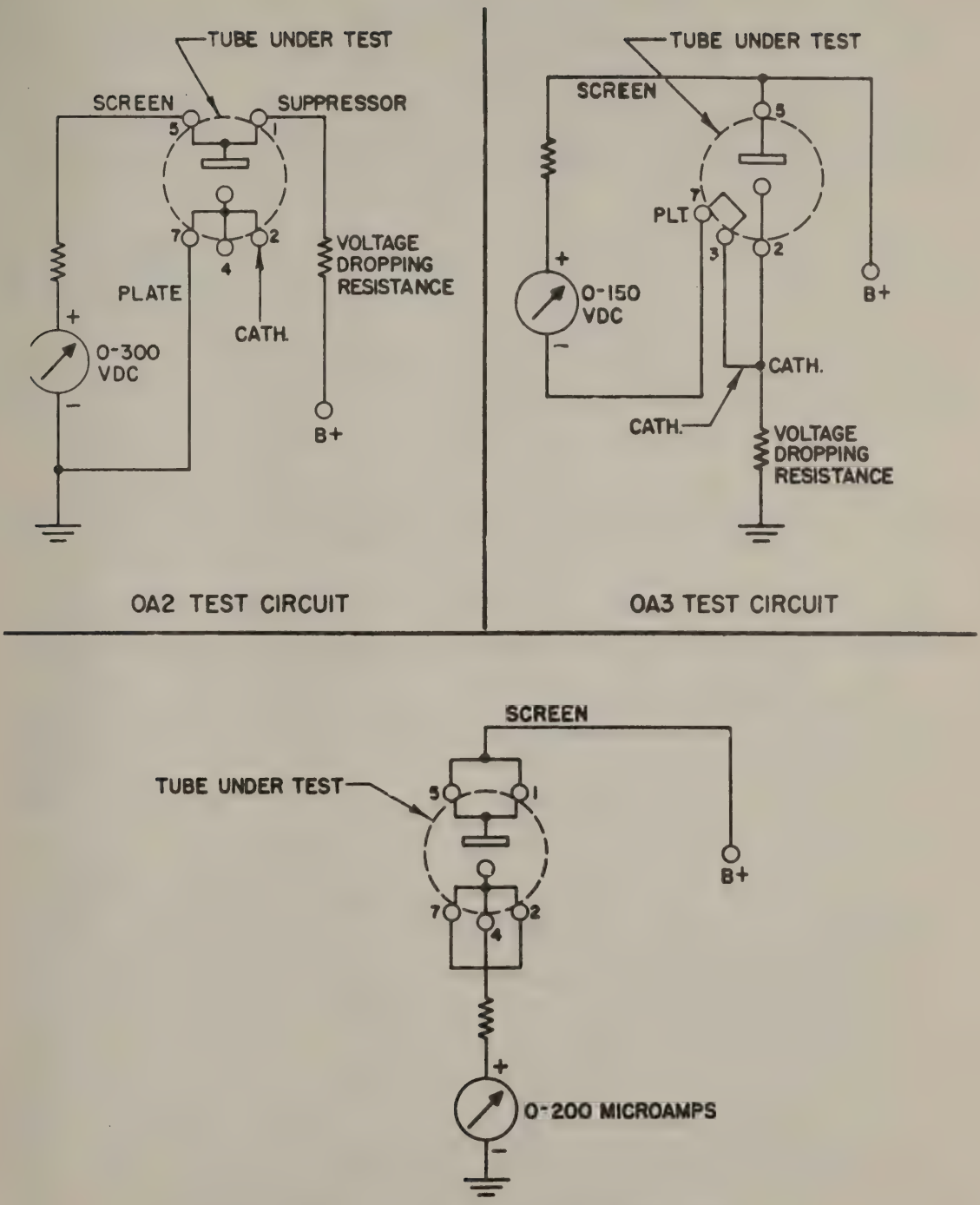

Figure 9 - Voltage Regulator Test Circuits

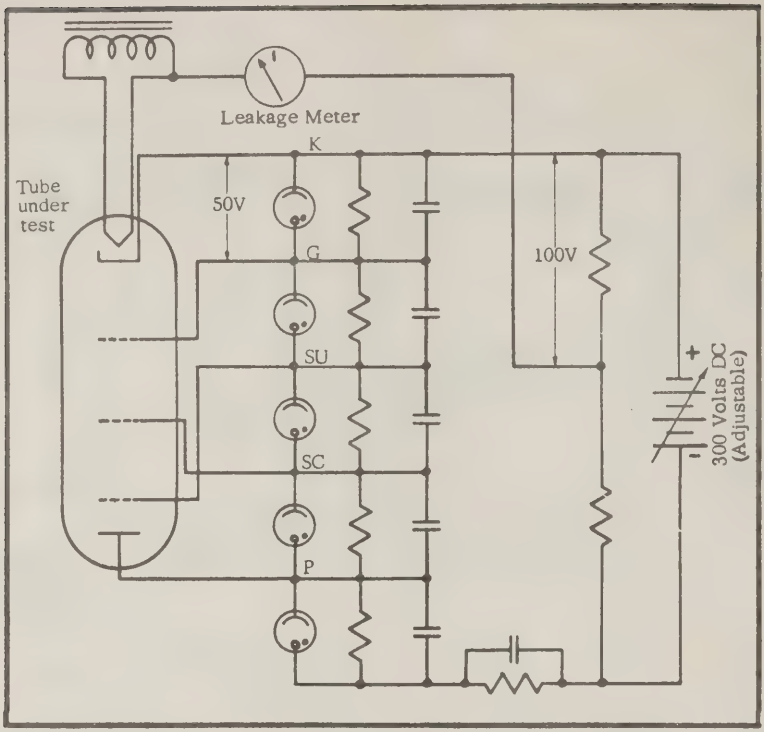

Figure 10 - Shorts and Cathode-to-Filament Leakage Test Circuit

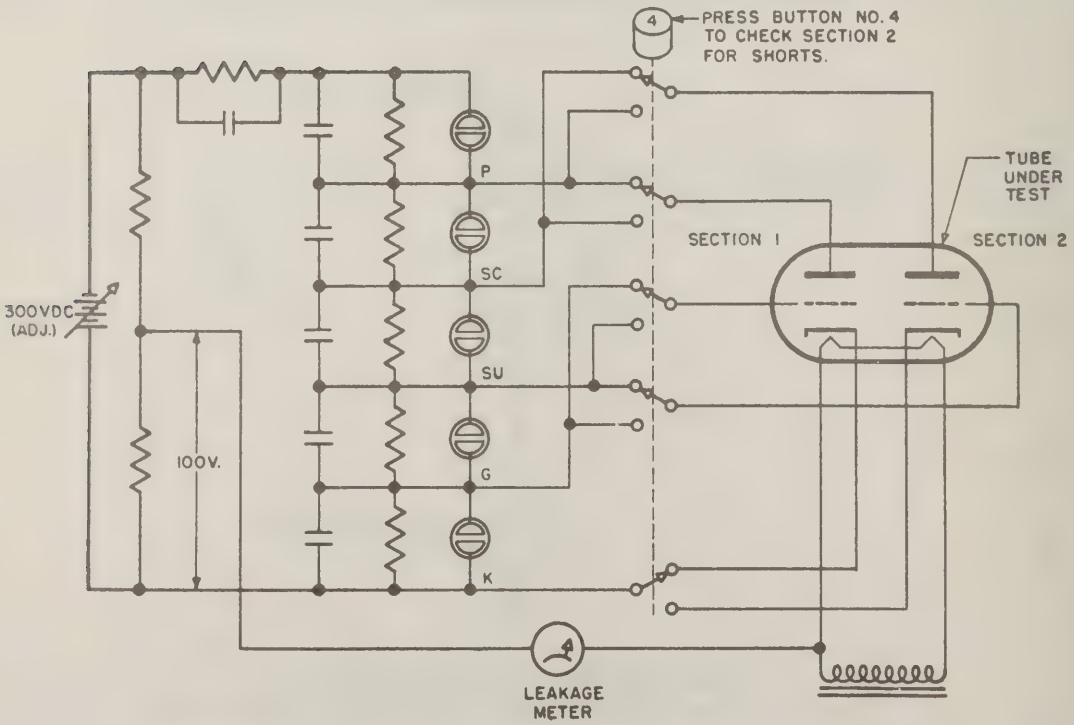

Figure 11 - Shorts and Cathode-to-Filament Leakage Test Circuit
(Multi-Section Tube)

5. 11 The second rectifier test is for half-wave tubes in which the load resistance is adjusted in series with the milliammeter without the filter capacitor. The circuit for this test is shown in figure 8.

5. 12 High voltage type rectifiers are tested on a circuit similar to that shown. High voltage ac is applied from the plate to the cathode in series with a load resistance and its filter capacitor and then through the dc milliammeter. A low voltage across the tube would reveal its emission characteristics but by using the load capacitor it is possible to develop approximately 1200 volts peak inverse which will show arcing conditions.

5. 13 A high voltage diode may be checked for emission by the circuit shown in figure 8. The regulated power supply is connected directly across the tube and the current is metered through the tube. The reject value for this type of tube is fairly low and since the reject point is midscale on the meter most tubes will read near full scale.

5. 14 Another type of emission circuit as shown in figure 8 is mainly for use in testing high perveance detector diodes. Ten volts dc is applied across the tube with the milliammeter in series. This type of tube is rated for about 60 MA and is rejected at about 25% of this figure. Low perveance diodes are tested the same way except it is necessary to use a higher impedance 10V supply. Low perveance tubes are rated about 2 MA with a reject point of about 0. 3 MA.

5. 15 Voltage regulator tubes are checked for continuity, leakage, voltage drop at low current and voltage drop at high current. The regulator tubes are tested by using four cards, one of which is an instruction card that is not inserted into the tester. The number 2 card measures leakage as shown in figure 9.

The tube jumpers are connected together and the voltage is applied across the tube in series with the meter. The reject point for these tubes is 10% of full scale. Card 3 is for measuring the voltage drop across the tube at low current while card 4 measures the drop at high current. The difference between the meter readings using these two cards is the regulating ability of the tube. The nearer to zero the difference the better the regulation. The number 1 card has test information to guide the operator in judging test results. Typical VR test circuits are shown in figure 9. The shorts test lamps are used to check jumper continuity. The left lamp will glow on cards 3 and 4 indicating a plate to cathode short. Should a tube have discontinuity no reading will be obtained on the tester meter when button 2 is pressed. Normally a good tube will read half scale on the meter.

5. 16 Short Test. When a tube is inserted into the set for test, it is immediately subjected to a gradient type of DC voltage as illustrated in figures 10 and 11, which show the short test circuits for typical single and multi-sections. This voltage gradient is adjusted so that all five neon lamps are extinguished unless a resistive path exists across them. The voltage gradient appears across a series of relaxation oscillator circuits, composed of a capacitor and resistor connected to each lamp and tube element. The short resistance determines the charging rate of the capacitor. The capacitor charges to the lamp starting voltage then discharges through the lamp. The cycle then repeats. The circuit is thus set up so that the lamps will flash intermittently for a high resistance and glow steadily for a low resistance short. The DC voltage is polarized in such a way that if the tube exhibits grid emission the lamps will also flash. The sensitivity of the shorts test circuit from grid to cathode is 1 megohm indication and 2 megohms no indication. The sensitivity of the short test for various interelement shorts is shown in figure 12. A separate pushbutton in the auxiliary compartment is used to check critical grid-to-cathode shorts at a sensitivity of 10 megohms indication and 20 megohms no indication. If the neon short test lamps indicate that an interelement short exists, the chart in figure 12 should be used as an aid in identifying the shorted elements. Certain diodes, due to a shield connection in the test circuit, may indicate a short from grid or suppressor to the other tube elements. Damper diodes will show a plate-to-cathode short as a screen-to-cathode short due to the test circuit arrangement.

5.17 Leakage Test. This test is made by placing a microammeter in series with the heater and cathode, see figure 10. A system of shunts is available so that the reject point can be set up individually for the various types of tubes. The tester meter scale has definite reject point but actual current may be as low as 10 microamperes or as high as 150 microamperes depending on the type of tube. By using this system nearly any handbook condition can be duplicated. The amount of leakage tolerable is of course dependent on the application. As an example, a tube used in a cathode follower circuit with high cathode resistance may have to be rejected with as little as 10 microamperes of cathode to filament leakage. On the other hand a direct cathode to filament short in a tube used in a grounded cathode circuit may be insufficient cause for rejection.

5.18 Gas Test. Button 3 is used to test the tube for grid current due to gas. Pressing button 3 also actuates the button 2 through an interlock which operates the tube under normal bias and plate current conditions. If gas ions are present in the vacuum they will migrate to the negative grid and cause a current to flow which is read on the number 3 scale of the meter. The allowable grid current, due to gas, ranges from .5 to 3 microamps depending on the tube type. Of course, tubes having no grids cannot be tested for gas in this manner. In all of the tube tests a zero bias grid voltage is avoided because it would cause the meter to deflect to the left or opposite to that of gas current due to contact potential.

If the meter deflection is beyond the green sector of the meter under #3 test, the amplifier tube has a grid current in excess of 3 microamperes and it is definitely of no useful service. This reject point is based upon manufacturers' specifications for a large number of tubes. However, in circuits where there is a high grid impedance present even a 1/2 microampere grid current is harmful, therefore any up scale deflection under #3 test should be regarded with question for a given tube.

PENTODE SHORT OR LEAKAGE PATH	NEON LAMPS P	SC	SU	G	K	FULL WAVE RECTIFIER OR DUAL DIODE AND DUAL TRIODE SHORT OR LEAKAGE PATH *	MAXIMUM SENSITIVITY REGION (MEGOHMS)
CATH - GRID	X	X	X	X		CATH - GRID - SECT. 1	1 - 2
CATH - SUPR.	X	X	X			CATH, SECT. 1 - GRID, SECT. 2	5 - 10
CATH - SCRN.	X	X				CATH, SECT. 1 - PLT., SECT. 2	15 - 30
CATH - PLT.	X					CATH - PLT., SECT. 1	30 - 60
GRID - SUPR.	X	X	X		X	GRID, SECT. 1 - GRID, SECT. 2	1 - 2
GRID - SCRN.	X	X			X	GRID, SECT. 1 - PLT. SECT. 2	5 - 10
GRID - PLT.	X				X	GRID - PLT., SECT. 1	15 - 30
SUPR - SCRN.	X	X		X	X	GRID - PLT., SECT. 2	1 - 2
SUPR - PLT.	X			X	X	PLT., SECT. 1 - GRID, SECT. 2	5 - 10
SCRN - PLT.	X		X	X	X	PLT., SECT. 1 - PLT., SECT. 2	1 - 2

*CHART SHOWS INDICATIONS WITH BUTTON NO. 4 NOT PRESSED. WHEN BUTTON NO. 4 IS PRESSED, SECTION 1 BECOMES SECTION 2 AND SECTION 2 BECOMES SECTION 1. (SEE FIG. 11)

THE (X) MARK INDICATES A GLOWING LAMP.

Figure 12 - Interelement Shorts Identification

B. Circuit Description

5. 19 For convenience the schematic circuit is divided into 3 parts. The power supply is shown on Sheet 1. Automatic circuit selection is on Sheet 2. Connections to the tube sockets, push buttons, shorts test and miscellaneous circuits are on Sheet 3.

5. 20 The power supply, Sheet 1, has two transformers (filament and power) which supply the various voltages required. Both sides of the main power line are fused for protection of the transformers against large overloads.

5. 21 The majority of the components of the power supply are protected against overload by two methods. First, the main B+ supply is protected by a circuit consisting of a line slave relay, K101, and an overload sensing reedrelay, K102. The contacts of the reedrelay are connected across the coil of the line slave relay. When an overload occurs in the main B+ supply, the reedrelay contacts close, shorting out the coil on the line slave relay. The line slave relay becomes de-energized, opening both sides of the input power line. Secondly, excessive signals appearing across the meter will be detected by the transistorized meter protection circuit. Signals detected by the protection circuit will remove the power from the line slave relay K101, which will open both sides of the power line.

5. 22 The filament transformer is protected by a 100 watt electric light bulb in series with the primary. This lamp functions as a non-linear resistance network to assure that the filament drain never exceeds 20 watts. When a direct short circuit is applied to the secondary of this transformer the lamp absorbs the overload.

5. 23 The filament transformer supplies ac voltages for tubes under test. These voltages are reduced 10% through a switch in the primary winding for cathode activity tests. The filament transformer primary also has a selector switch that is used to compensate for variations in line voltage over a range of 105 to 125 volts. This switch may be used for critical tests or for tubes having heavy filament drains. However, for normal tests it is left at the 115 volt point.

5. 24 The tester has three operational B+ supplies which are: the main B+, auxiliary B+ and unregulated B+. The main B+ is used as the plate and screen supply for the tube under test. Referring to the power supply schematic, the 250V taps of the power transformer supply the 5U4GB rectifier which is in turn connected to the plate of the 6CD6 series regulator tube. The pentode section of the 6AW8A is an amplifier for the feedback loop which controls the grid of the 6CD6 by sensing the output voltage called for or by sensing a need for regulation because of voltage change. The triode section of the 6AW8A is a voltage reference tube to establish a constant potential at the cathode of the pentode section. The 6C4WA is a low impedance control tube for the screen of the series regulator and is driven from the plate circuit of the amplifier tube. Both grids of the series regulator are being driven but the control is directly to the screen by a voltage from the 6203 through the 6C4WA control tube. The only filtering is through the screen supply from the 6203. The output voltage from this supply is controlled by the group of resistors in series which is shown on Schematic Sheet 2. By closing various switch combinations a voltage from 10 volts to 260 volts in 10 volt steps may be selected. The current drain of the voltage selection network is constant at 1 MA.

5. 25 The auxiliary B+ supply is used primarily in cold cathode tube tests but may be used for other special data requirements. It is supplied by the 6203 rectifier with the 6CL6 being used as the series regulator. The pentode section of the 6AU8 is the loop amplifier for the feedback circuit. The circuit is manually controlled by the auxiliary B+ potentiometer. It is monitored by pressing a button and reading the tester meter. The voltage may be interpreted by multiplying the meter reading by three (the monitoring meter reads 300 volts full scale). The supply is fused and does not operate through the protective relay circuit. The supply is variable from 30 volts to 300 volts at currents up to 30 MA.

5.26 The unregulated B+ is obtained from the cathode of the 5U4GB through a simple filter. It provides approximately 350 volts which varies with line and load. It is used in tests where the voltage is immaterial but a high current is desired. An example of this would be in a high emission "knee" test of a pulse power pentode.

5.27 The tester has a low current regulated supply of approximately plus 150 volts which has three uses as follows: a positive reference grid supply, a part of the supply for the shorts test, and a part of the supply for the heater to cathode leakage test. It is derived from the 6203 through the 6AU8 triode connected as a shunt regulator. A feedback system of neon lamps establishes the +150 volts. The positive reference is taken off a resistive network from 0 volts to +150 volts. This supply can be used as a reference voltage for the grid of a tube under test. It allows the use of larger self bias resistance while the equivalent tube is still negative.

5.28 The minus 150 volt supply is stabilized and is the basic reference voltage for all other regulator supplies. It forms the negative potential for the shorts test and heater to cathode leakage test circuits and is used as the bias supply. It is derived from 275 volts each side of the center tap and through rectifiers CR101 and CR102. The OA2WA shunt regulator controls the minus supply and is the voltage reference for all regulated supplies.

5.29 The fixed bias supply, for tubes under test, is obtained directly across the OA2WA tube. It has a range of 0.1 volt to 100V in approximately 0.1 volt steps by using a decade resistor system which is shown on Schematic Sheet 2.

5.30 The bias off supply is similar to the fixed bias supply. It is used to hold off a section of a tube while another section is being tested. An example of its use would be for testing a dual pentode with common screen and common cathode.

5.31 The power supply furnishes a grid signal of 0.222 volts from the 10 volt winding of the transformer and an ac bridge type regulating circuit.

5.32 Other voltages from the power supply are:

(a) 250 volts ac used mainly for rectifier tests
(b) 10 volts for driving the transconductance bridge
(c) Filament supplies for tubes within the power supply

5.33 The secondary of the transformer which supplies voltages to the filaments of tubes under test is shown on Schematic Sheet 2. These voltages may be varied from 0.1 volt to 119.9 volts in 0.1 volt steps. Sheet 2 also shows a full wave bridge rectifier which supplies up to 1.0 ampere of dc for filamentary type tubes. This DC filament supply is fused and does not depend on the protective circuit for protection.

5.34 Referring to Schematic Sheet #2 it may be seen that it is largely composed of single pole single throw switches and resistors. These switches are labelled according to their positions in the card switch. By closing various combinations of these switches, the program card automatically selects the circuits to be used on the tube under test.

5.35 The group of switches and resistors (R215, R229 and R231) along the bottom of the sheet form a decade resistance network. This network is used for applying the proper fixed bias to the tube under test up to 100 volts in 0.1 volt steps by closing various switches to short out unwanted resistors. This decade system has many uses other than negative grid bias. By referring to the circuit theory section it may be seen that it is used as cathode resistance in self bias tests; it is applied to both control grids in heptodes and is often used as voltage dropping resistance in other tests.

5.36 Referring again to schematic sheet 2 there is another group of switches and resistors

B. Circuit Description

5. 19 For convenience the schematic circuit is divided into 3 parts. The power supply is shown on Sheet 1. Automatic circuit selection is on Sheet 2. Connections to the tube sockets, push buttons, shorts test and miscellaneous circuits are on Sheet 3.

5. 20 The power supply, Sheet 1, has two transformers (filament and power) which supply the various voltages required. Both sides of the main power line are fused for protection of the transformers against large overloads.

5. 21 The majority of the components of the power supply are protected against overload by two methods. First, the main B+ supply is protected by a circuit consisting of a line slave relay, K101, and an overload sensing reedrelay, K102. The contacts of the reedrelay are connected across the coil of the line slave relay. When an overload occurs in the main B+ supply, the reedrelay contacts close, shorting out the coil on the line slave relay. The line slave relay becomes de-energized, opening both sides of the input power line. Secondly, overloads which cause the meter needle to deflect excessively, either up-scale or down-scale, will be detected by contacts in the meter. These contacts energize another reedrelay, K104, which also will cause the line slave relay to de-energize, opening both sides of the power line. (See Section 6. 13 and Figure 16).

5. 22 The filament transformer is protected by a 100 watt electric light bulb in series with the primary. This lamp functions as a non-linear resistance network to assure that the filament drain never exceeds 20 watts. When a direct short circuit is applied to the secondary of this transformer the lamp absorbs the overload.

5. 23 The filament transformer supplies ac voltages for tubes under test. These voltages are reduced 10% through a switch in the primary winding for cathode activity tests. The filament transformer primary also has a selector switch that is used to compensate for variations in line voltage over a range of 105 to 125 volts. This switch may be used for critical tests or for tubes having heavy filament drains. However, for normal tests it is left at the 115 volt point.

5. 24 The tester has three operational B+ supplies which are: the main B+, auxiliary B+ and unregulated B+. The main B+ is used as the plate and screen supply for the tube under test. Referring to the power supply schematic, the 250V taps of the power transformer supply the 5U4GB rectifier which is in turn connected to the plate of the 6CD6 series regulator tube. The pentode section of the 6AW8A is an amplifier for the feedback loop which controls the grid of the 6CD6 by sensing the output voltage called for or by sensing a need for regulation because of voltage change. The triode section of the 6AW8A is a voltage reference tube to establish a constant potential at the cathode of the pentode section. The 6C4WA is a low impedance control tube for the screen of the series regulator and is driven from the plate circuit of the amplifier tube. Both grids of the series regulator are being driven but the control is directly to the screen by a voltage from the 6203 through the 6C4WA control tube. The only filtering is through the screen supply from the 6203. The output voltage from this supply is controlled by the group of resistors in series which is shown on Schematic Sheet 2. By closing various switch combinations a voltage from 10 volts to 260 volts in 10 volt steps may be selected. The current drain of the voltage selection network is constant at 1 MA.

5. 25 The auxiliary B+ supply is used primarily in cold cathode tube tests but may be used for other special data requirements. It is supplied by the 6203 rectifier with the 6CL6 being used as the series regulator. The pentode section of the 6AU8 is the loop amplifier for the feedback circuit. The circuit is manually controlled by the auxiliary B+ potentiometer. It is monitored by pressing a button and reading the tester meter. The voltage may be interpreted by multiplying the meter reading by three (the monitoring meter reads 300 volts full scale). The supply is fused and does not operate through the protective relay circuit. The supply is variable from 30 volts to 300 volts at currents up to 30 MA.

5. 26 The unregulated B+ is obtained from the cathode of the 5U4GB through a simple filter. It provides approximately 350 volts which varies with line and load. It is used in tests where the boltage is immaterial but a high current is desired. An example of this would be in a high emission "knee" test of a pulse power pentode.

5. 27 The tester has a low current regulated supply of approximately plus 150 volts which has four uses as follows: a positive reference grid supply, a voltage for operating the reedrelay, K104, for the meter contacts, a part of the supply for the shorts test, and a part of the supply for the heater to cathode leakage test. It is derived from the 6203 through the 6AU8 triode connected as a shunt regulator. A feedback system of neon lamps establishes the +150 volts. The positive reference is taken off a resistive network from 0 volts to +150 volts. This supply can be used as a reference voltage for the grid of a tube under test. It allows the use of larger self bias resistance while the equivalent tube is still negative.

5. 28 The minus 150 volt supply is stabilized and is the basic reference voltage for all other regulator supplies. It forms the negative potential for the shorts test and heater to cathode leakage test circuits and is used as the bias supply. It also supplies the voltage for the hold coil on reedrelay, K104, in the protective circuit. It is derived from 275 volts each side of the center tap and through rectiviers CR101 and CR102. The OA2WA shunt regulator controls the minus supply and is the voltage reference for all regulated supplies.

5. 29 The fixed bias supply, for tubes under test, is obtained directly across the OA2WA tube. It has a range of 0.1 volt to 100V in approximately 0. 1 volt steps by using a decade resistor system which is shown on Schematic Sheet 2.

5. 30 The bias off supply is similar to the fixed bias supply. It is used to hold off a section of a tube while another section is being tested. An example of its use would be for testing a dual pentode with common screen and common cathode.

5. 31 The power supply furnishes a grid signal of 0. 222 volts from the 10 volt winding of the transformer and an ac bridge type regulating circuit:

5. 32 Other voltages from the power supply are:

(a) 250 volts ac used mainly for rectifier tests
(b) 10 volts for driving the transconductance bridge
(c) Filament supplies for tubes within the power supply

5. 33 The secondary of the transformer which supplies voltages to the filaments of tubes under test is shown on Schematic Sheet 2. These voltages may be varied from 0.1 volt to 119.9 volts in 0.1 volt steps. Sheet 2 also shows a full wave bridge rectifier which supplies up to 1.0 ampere of dc for filamentary type tubes. This DC filament supply is fused and does not depend on the protective relay circuit for protection.

5. 34 Referring to Schematic Sheet #2 it may be seen that it is largely composed of single pole single throw switches and resistors. These switches are labelled according to their positions in the card switch. By closing various combinations of these switches, the program card automatically selects the circuits to be used on the tube under test.

5. 35 The group of switches and resistors (R215, R229 and R231) along the bottom of the sheet form a decade resistance network. This network is used for applying the proper fixed bias to the tube under test up to 100 volts in 0.1 volt steps by closing various switches to short out unwanted resistors. This decade system has many uses other than negative grid bias. By referring to the circuit theory section it may be seen that it is used as cathode resistance in self bias tests; it is applied to both control grids in heptodes and is often used as voltage dropping resistance in other tests.

5. 36 Referring again to schematic sheet 2 there is another group of switches and resistors

(R234 and R240) located in the lower left hand corner of the drawing. This group of switches and resistors is used to establish the output voltage of the regulated B+ supply. The following table lists the switch combinations which are closed to obtain the various output voltages:

VOLTS	CLOSE SWITCH	VOLTS	CLOSE SWITCH
10	D-17, L-3, L-4	140	B-17, L-4
20	D-17, E-17, L-4	150	B-17, E-17
30	D-17, L-4	160	B-17
40	D-17, E-17	170	L-2, L-3, L-4
50	D-17	180	L-2, E-17, L-4
60	C-17, E-17, L-3, L-4	190	L-2, L-4
70	C-17, L-3, L-4	200	L-2, E-17
80	C-17, E-17, L-4	210	L-2
90	C-17, L-4	220	L-3, L-4
100	C-17, E-17	230	E-17, L-4
110	C-17	240	L-4
120	B-17, L-3, L-4	250	E-17
130	B-17, E-17, L-4	260	None

5.37 The group of switches and resistors (R203 to R205) is used as shunts to the meter for establishing sensitivity of the leakage test.

5.38 The group of switches and resistors in the center of schematic sheet 2 at the top, is used as shunts and multipliers for the meter when used in the quality test. These shunts and multipliers make it possible to provide broad ranges of sensitivities as discussed in the section on circuit theory.

5.39 The group of components in the center of schematic sheet 2 forms the Gm bridge circuit. For purposes of analyzing this circuit consider the meter and its shunts connected across condensers C401 and C402 and a 10 volt transformer winding connected across C403. The transformer winding acts as a bias source to alternately turn on diodes CR401 and CR403 while turning off diodes CR402 and CR404 and vice versa. By this action all the DC current that enters the bottom end of the bridge is chopped into alternating current, sent through the meter and its shunts, and put back together again into a DC current as it flows out of the top of the bridge. The meter, which is a direct current average reading device, will respond to the difference in the magnitude of the two alternating current pulses. By modulating the grid of the tube under test with an AC signal of the same phase relationship as the 10 volt bias winding in the bridge, these two current pulses will be of different magnitude and the meter can be calibrated directly in micromhos inasmuch as it is responding to a minute change in plate current with minute change in grid voltage which is by definition, transconductance. The resistor network, consisting of R402 to R406, is of a high impedance nature and is used to balance out the back resistance characteristics of the diodes. Potentiometer R405 is then called Gm balance low current. Potentiometer R401 is of very low value and is in series with the diodes. This potentiometer is called Gm balance high current and is used to balance the bridge for the forward characteristic of the diodes at a high current. This circuit is separately fused in order to prevent damage to the bridge under certain short circuit conditions that cannot be sensed by the relay protection circuit.

5.40 The rest of the contact groups appearing on sheet 2 are used to establish the test configuration and to control miscellaneous other circuits.

5.41 Sheet 3 of the schematic contains a group of card switch contacts which provide connections to the pins of the tube under test. The short, leakage and gas test circuits are shown on this figure but are completely described in 5.16, 5.17 and 5.18. The remainder of sheet 3 consists of the push button and meter circuits. It should be noted that when button 3 (GAS) is pressed it also actuates button 2 (QUALITY). This maintains normal operating conditions on the tube but switches the meter to the grid circuit.

6. MAINTENANCE

A. General

6.01 Most maintenance on this equipment can be accomplished with the aid of the Routine Calibration procedure, the Complete Calibration Procedure, the Trouble Shooting Procedure and the Voltage and Resistance Chart. All these procedures make use of test cards stored in the tester case cover.

B. Complete Calibration

6.02 Perform the Routine Calibration procedure as listed in section 3. Then proceed as follows:

6.03 Signal Adjustments:

a. Connect the tube tester to the power line thru a Variac set to 115 volts. See figure 13. Turn the instrument on.

Insert Card 11, SIG. REG. AND AMPL, into the Card Switch. Connect a high-impedance, sensitive AC voltmeter from pin 3 to pin 6 on any convenient socket. NOTE: THIS MUST BE A HIGH IMPEDANCE AC VACUUM TUBE VOLTMETER, CAPABLE OF ACCURATE MEASUREMENT OF 0.222 VOLTS RMS. BALLANTINE MODEL 300 OR EQUIVALENT IS RECOMMENDED.

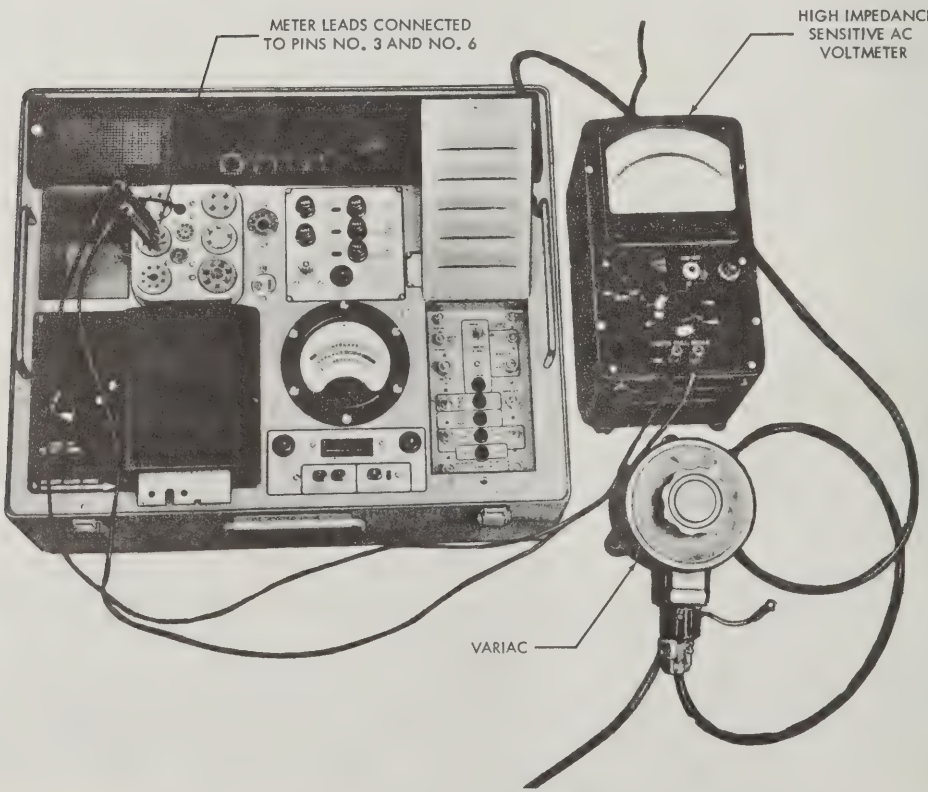

Figure 13 - Signal Regulation and Amplitude Check

b. While holding down button #2, vary the line voltage from 105 to 125 volts. Note reading indicated on the vacuum tube voltmeter. The indicated voltage at 105 and 125 should be identical and should not vary more than 1% from the indicated voltage at 115 volts line. If the circuit is not regulating as specified, adjust the SIGNAL CAL REGULATION control and vary the line voltage to attain the desired regulation.

c. After the signal regulation is properly adjusted, set the exact signal level of 0. 222 volts rms by adjusting the SIGNAL CAL AMPLITUDE control.

6. 04 Filament Standardization Adjust.

a. Method One.

Connect the instrument to the power line thru a Variac. Turn instrument on. Monitor the voltage delivered to the instrument with an AC voltmeter and adjust the Variac to deliver 115 V RMS.

Insert Card 12, FIL STD ADJUST.

Set the FILAMENT STD ADJ located in the auxiliary control compartment, to the NOM 115V position (white dot on knob lines up with dot on panel).

Press the FILAMENT STD ADJ push button. The meter should read half scale ± 1 division.

If correction is necessary adjust the FILAMENT STD CAL control located in the upper right corner of the control compartment, for proper indication

b. Method Two.

Connect the instrument to the power line and turn it on. Connect an AC voltmeter capable of accurately measuring 5 volts RMS to pins 3 and 6 on any convenient tube socket. (The Ballantine Model 300 or equivalent used for signal adjustments can also be used for this measurement.) See Figure 13.

Insert Card 12, FIL. STD. ADJ. into switch.

Set the FILAMENT STD ADJ knob so that the external AC voltmeter indicates 5 volts.

Press the FILAMENT STD ADJ push button. The tester meter should read half-scale ± 1 division.

If correction is necessary adjust the FILAMENT STD CAL control, located in the upper right corner of the control compartment, for proper indication.

6. 05 Main B+ Power Supply

a. Feedback current adjust:

Remove the black perforated cover over the power supply tubes. Remove the 6CD6, V103, and the 6AW8A, V105, from their sockets. See Figure 14. Insert Card 13, FEEDBACK B PLUS.

WARNING: BE SURE TUBES ARE REMOVED BEFORE INSERTING CARD 13.

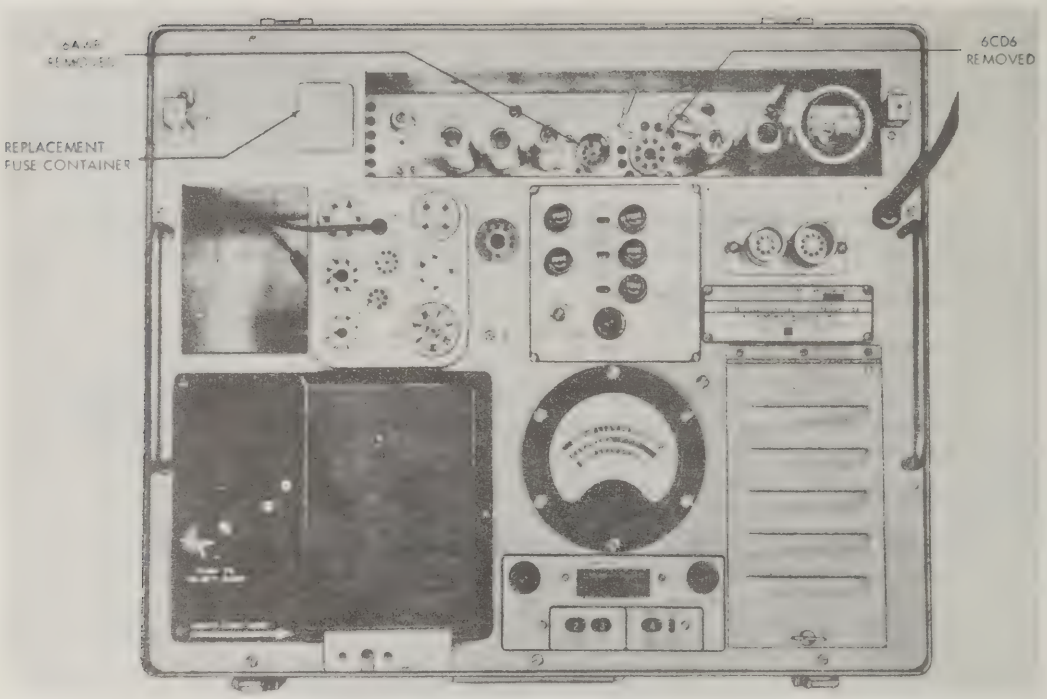

Figure 14 - B+ Power Supply Feed Back Current Test

Press button #2. The meter should read mid-scale (1MA feedback current.) If reading is not correct, adjust the FEEDBACK CURRENT ADJ. control, R123, located on the power supply chassis, for proper indication.

After proper adjustment - REMOVE CARD 13 FROM THE CARD SWITCH BEFORE RETURNING THE 6CD6 AND 6AW8A TO THEIR PROPER SOCKETS.

Insert Card #8, MAIN B PLUS CAL. Press button #2 and check for a mid-scale reading. Readjust the MAIN B+ CAL control if necessary.

b. Series Regulator Screen Voltage Adjustment.

Insert Card 14, 6CD6 SCRN ADJUST. Press button #2. The meter reading should be approximately mid-scale. While holding down button #2, slowly rotate the SCR. ADJ. control, R109 (located on the power supply chassis) counter-clockwise until the meter indication just starts to drop from its normal mid-scale position. Then turn the control clockwise just enough to restore the mid-scale reading and leave it at this setting.

C. Trouble Shooting Procedure

6.06 General

As stated earlier the AN/USM-118A is equipped with self-calibrating features. The calibration program cards also greatly simplify the troubleshooting of the tester. The

following procedures will aid in isolating defective parts in various circuits in this equipment.

6.07 Line Power

The AN/USM-118B Tester is designed to operate from a 105-125 volt, 50-400 cps power source.

If the PILOT light does not light when the tester is connected to a proper power source and the ON-OFF switch is held in the ON position, check the following components:

(a) Line fuses - F102 and F103
(b) PILOT lamp - DS107
(c) ON-OFF switch - S105
(d) Power transformer - T101

If the tester turns on when the ON-OFF switch is thrown, but turns off when the switch is released to the center position, check the following components.

(a) ON-OFF switch - S105
(b) Relay - K101
(c) Transistor - Q2
(d) Bridge Rectifier - CR103, CR104, CR105, CR106
(e) Resistor - R171 for adequate base drive to Q2

6.08 Short Test Circuit and Negative & Positive Bias Supplies

The 300 volt supply necessary for the short test circuit (see section 5.16, Fig. 11) is obtained from the combination of a +150 volt source and a -150 volt source. These same sources are also used individually for positive and negative bias supplies and other uses (see Sections 5.27 and 5.28). If any of the cards from card 2 thru card 7 give an improper indication, the trouble is likely to be in one of these two supplies. The trouble can be isolated in the following manner:

Measure the voltage from pin 7 of the OA2WA, V108, to pin 3 of the 6AU8, V107. This should be approximately 300 volts. If this reading is correct, and if any of cards 2, 3, 4, or 5 cannot be adjusted to operate properly as instructed in Section 3.07, the difficulty is in the short test circuit. This includes neons DS301 thru DS305, resistors R303 thru R316 and R135, and capacitors C301 thru C306 (schematic Sheet 3).

If the 300 volt reading is correct, and card 6, FIXED BIAS CAL NEG, gives an improper indication, check resistors R150 and R151 and potentiometer R149.

If the 300 volt reading is correct, and card 7, FIXED BIAS CAL POS, gives an improper indication, check resistor R131, potentiometer R136, and capacitor C110.

If the voltage reading as directed above is not approximately 300 volts, the difficulty is in the individual power supplies and can be located by checking for proper voltage and resistance values as listed in the power supply voltage and resistance chart (Figure 20).

6.09 GM Bridge Balance

The adjustments on the GM bridge are set using cards 9 and 10 as instructed in Section 3.10. If proper adjustment cannot be made, or if other test results indicate that the GM measuring circuit is at fault, the GM bridge should be checked. This includes the diamond-shaped network in the center of schematic sheet 2, along with the associated fuse circuit.

The operation of the GM bridge is presented in Section 5.39. Check the components

of this network for proper characteristics, and check the power transformer T101 between taps 18 and 19, for 10 volts RMS.

6. 10 Signal Regulation

The signal bridge adjustments are set using card 11 as instructed in Section 6. 03. If proper adjustment cannot be made, check the components of the signal bridge circuit, including resistors R153, R154, and R156, potentiometers R152 and R155 and the #47 lamps DS109 and DS110. Also check the power transformer T101 for the proper voltage (10 volts RMS) between taps 20 and 21.

6. 11 Main B+ Power Supply Tracking.

Insert Cards 15A thru 22A successively into the card switch. Push button #2. The meter reading should be within the tolerances listed in the table below.

During these tests an accurate DC voltmeter (20,000 ohms per volt, Hickok Model 456, or equivalent) may be connected to pins 3 and 6 on any convenient socket as shown in Figure 15. The voltage readings on the external meter should be as follows:

Card #	TESTER INDICATION	INDICATED VOLTAGE	COMPONENT		
15A	50 ± 5 div.	10 ± 10%	R238	10K	1%
16A	50 ± 2 div.	20 ± 3%	R239	20K	1%
17A	50 ± 2 div.	20 ± 3%	R240	20K	1%
18A	50 ± 2 div.	60 ± 3%	R237	62K	1%
19A	50 ± 2 div.	110 ± 3%	R236	52K	1%
20A	50 ± 2 div.	160 ± 3%	R235	52K	1%
21A	50 ± 2 div.	210 ± 3%	R234	52K	1%
22A	50 ± 2 div.	260 ± 3%			

following procedures will aid in isolating defective parts in various circuits in this equipment.

6.07 Line Power

The AN/USM-118A Tester is designed to operate from a 105-125 volt, 50-400 cps power source.

If the PILOT light does not light when the tester is connected to a proper power source and the ON-OFF switch is held in the ON position, check the following components:

(a) Line fuses - F102 and F103
(b) PILOT lamp - DS107
(c) ON-OFF switch - S105
(d) Power transformer - T101

If the tester turns on when the ON-OFF switch is thrown, but turns off when the switch is released to the center position, check the following components.

(a) Bridge rectifier - CR103
(b) Resistor - R158
(c) Relay - K101
(d) ON-OFF switch - S105

6.08 Short Test Circuit and Negative & Positive Bias Supplies

The 300 volt supply necessary for the short test circuit (see section 5.16, Fig. 11) is obtained from the combination of a +150 volt source and a -150 volt source. These same sources are also used individually for positive and negative bias supplies and other uses (see Sections 5.27 and 5.28). If any of the cards from card 2 thru card 7 give an improper indication, the trouble is likely to be in one of these two supplies. The trouble can be isolated in the following manner:

Measure the voltage from pin 7 of the OA2WA, V108, to pin 3 of the 6AU8, V107. This should be approximately 300 volts. If this reading is correct, and if any of cards 2, 3, 4 or 5 cannot be adjusted to operate properly as instructed in Section 3.07, the difficulty is in the short test circuit. This includes neons DS301 thru DS305, resistors R303 thru R316 and R135, and capacitors C301 thru C306 (schematic Sheet 3)

If the 300 volt reading is correct, and card 6, FIXED BIAS CAL NEG, gives an improper indication, check resistors R150 and R151 and potentiometer R149.

If the 300 volt reading is correct, and card 7, FIXED BIAS CAL POS, gives an improper indication, check resistor R131, potentiometer R136, and capacitor C110.

If the voltage reading as directed above is not approximately 300 volts, the difficulty is in the individual power supplies and can be located by checking for proper voltage and resistance values as listed in the power supply voltage and resistance chart (Figure 20).

6.09 GM Bridge Balance

The adjustments on the GM bridge are set using cards 9 and 10 as instructed in Section 3.10. If proper adjustment cannot be made, or if other test results indicate that the GM measuring circuit is at fault, the GM bridge should be checked. This includes the diamond-shaped network in the center of schematic sheet 2, along with the associated fuse circuit.

The operation of the GM bridge is presented in Section 5.39. Check the components

of this network for proper characteristics, and check the power transformer T101 between taps 18 and 19 for 10 volts RMS.

6. 10 Signal Regulation

The signal bridge adjustments are set using card 11 as instructed in Section 6. 03. If proper adjustment cannot be made, check the components of the signal bridge circuit, including resistors R153, R154 and R156, potentiometers R152 and R155 and the #47 lamps DS109 and DS110. Also check the power transformer T101 for the proper voltage (10 volts RMS) between taps 20 and 21.

6. 11 Main B+ Power Supply Tracking.

Insert Cards 15 thru 22 successively into the card switch. Push button #2. The meter should indicate mid-scale ± 2 divisions in each case.

During these tests an accurate DC voltmeter (20, 000 ohms per volt, Hickok Model 456, or equivalent) may be connected to pins 3 and 6 on any convenient socket as shown in Figure 15. The voltage readings on the external meter should be as follows:

Card #	Indicated Voltage	Component	
15	10	R238	10K ± 1%
16	20	R239	20K ± 1%
17	20	R240	20K ± 1%
18	60	R237	62K ± 1%
19	110	R236	52K ± 1%
20	160	R235	52K ± 1%
21	210	R234	52K ± 1%
22	260	"	

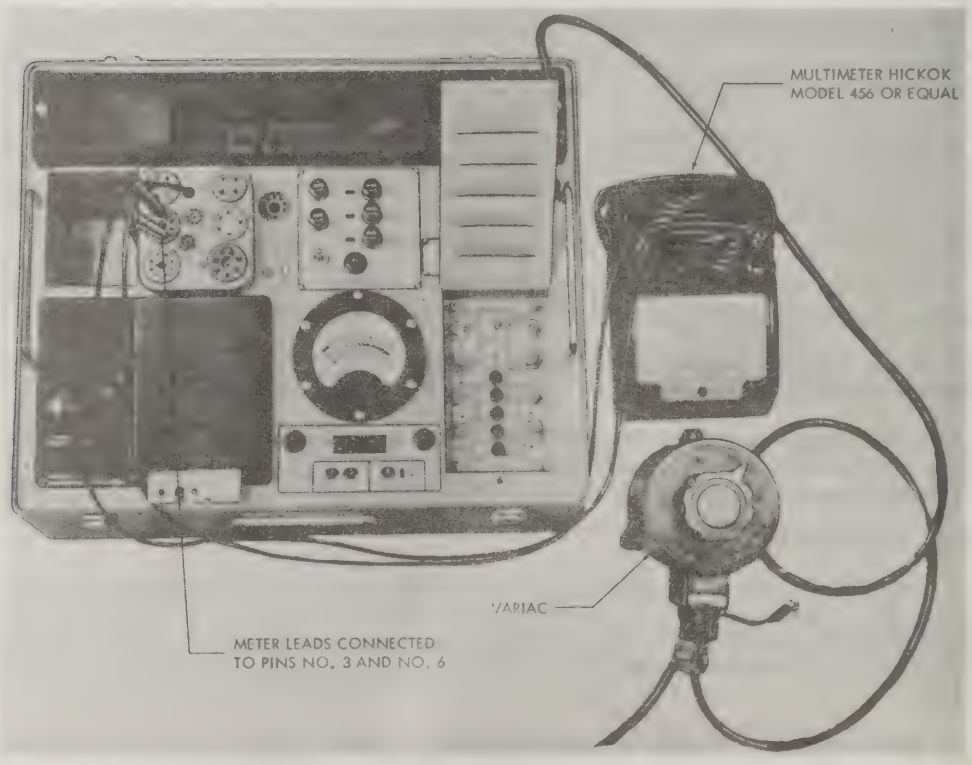

Figure 15 - Checking Main B+ Power Supply With the Aid of an External Meter

If the readings are not within the tolerances listed in the table, the associated resistor listed in the component column should be checked for proper value.

If the readings are improper on the tester meter while the external meter indicates proper tracking, check the meter shunts and multipliers (see Meter Circuits Checks, paragraph 6. 15).

If the readings are incorrect on both the tester meter and the external meter, check tubes V103, 6CD6; V105, 6AW8A (both sections); and V108, OA2WA. Also check for proper voltage and resistance values as listed in the power supply voltage and resistance chart (Figure 20).

6. 12 Main B+ Power Supply Regulation

Connect the tube tester to the power line through a Variac set to 115 volts. Insert card 23, MAIN B+ REG. Press button #2. The tester meter should read mid-scale ±2 divisions. Note the exact readings, then check the readings at 105 and 125 line voltages. These readings should not vary more than ±1 division from the 115 volt indication.

Reset Variac for 105 volt line. Again note reading indicated on meter (150 volts at 1. 5ma load). The meter indication should not vary more than 1 division from the 1. 5ma load (button #2 only) to the 140 ma load (button #2 and #4).

If circuits are not regulating properly, check tubes V103, 6CD6; V105, 6AW8A, (both sections); and V108, OA2WA. Also check for proper voltage and resistance values as listed in the Power Supply Voltage and Resistance Chart, (Figure 20).

6. 13 D. C. Filament - Cathode Activity Checks

To check the operation of the D. C. Filament and the Cathode Activity circuits use the following procedure:

Insert Card 24, DC FIL-CATH ACT. , into card switch. The left short lamp should light.

Standardize the filament supply with the FILAMENT STD. ADJ.

Press button #2. This permits the tester meter (set at 10 volts F. S.) to monitor the D. C. filament supply voltage under load (5 volts at 500ma load). The meter should read mid-scale ± 3 divisions.

If reading is out of tolerance, check the D. C. filament rectifiers CR201, CR202, CR203, and CR204.

Hold down button #2 and press the CATH ACT switch located in the auxiliary control compartment. This increases by 10% the number of windings used for the primary side of the filament transformer. The meter reading should drop 5 divisions. If the meter reading does not drop approximately 5 divisions, check the filament transformer T102 for a short between taps No. 34 and No. 35.

6. 14 Auxiliary B+ Power Supply

Connect the tester to the power line through a Variac. Insert Card 25, AUX B+ REG, in card switch. Short lamps 1, 2, 3, and 5 should light.

Supply Range: Press the AUX B+ ADJ button in auxiliary control compartment. This

If the readings are not mid-scale ± 2 divisions on the tester meter and not within 3% plus meter tolerance on the external meter, the associated resistor listed in the component column should be checked for proper value.

If the readings are improper on the tester meter while the external meter indicates proper tracking, check the meter shunts and multipliers (See Meter Circuits Checks, paragraph 6. 11).

If the readings are incorrect on both the tester meter and the external meter, check tubes V103, 6CD6; V105, 6AW8A (both sections); and V108, OA2WA. Also check for proper voltage and resistance values as listed in the power supply voltage and resistance chart (Figure 20).

6. 12 Main B+ Power Supply Regulation

Connect the tube tester to the power line through a Variac set to 115 volts. Insert Card 23, MAIN B PLUS REG. Press button #2. The tester meter should read mid-scale ± 2 divisions. Note the exact readings, then check the readings at 105 and 125 line voltages. These readings should not vary more than ± 1 division from the 115 volt indication.

Reset Variac for 105 volt line. Again note reading indicated on meter (150 volts at 1. 5 MA load). While holding down button #2, press button #4 (150 volts at 140 MA load). The meter indication should not vary more than 1 division from the 1.5 MA load (button 2 only) to the 140 MA load (button #2 and #4.)

If circuits are not regulating properly check tubes V103, 6CD6; V105, 6AW8A, (both sections), and V108, OA2WA. Also check for proper voltage and resistance values as listed in the Power Supply Voltage and Resistance chart, (Figure 20.)

6. 13 D. C. Filament - Cathode Activity Checks

To check the operation of the D.C. Filament and the Cathode Activity circuits use the following procedure:

Insert Card 24, DC FIL-CATH ACT., into card switch. The left short lamp should light.

Standardize the filament supply with the FILAMENT STD. ADJ.

Press button #2. This permits the tester meter (set at 10 volts F. S.) to monitor the D. C. filament supply voltage under load (5 volts at 500 MA load). The meter should read mid-scale ± 3 div.

If reading is out of tolerance check the D. C. filament rectifiers CR-201, CR-202, CR-203 and CR-204.

Hold down button #2 and press the CATH ACT switch located in the auxiliary control compartment. This increases by 10% the number of windings used for the primary side of the filament transformer. The meter reading should drop 5 divisions. If the meter reading does not drop approximately 5 divisions, check the filament transformer T102 for a short between taps No. 34 and No. 35.

6. 14 Auxiliary B+ Power Supply

Connect the tester to the power line through a Variac. Insert Card 25, AUX B PLUS REG, in card switch. Short lamps 1, 2, 3 and 5 should light.

Supply Range: Press the AUX B+ ADJ button in auxiliary control compartment. This

permits the tester meter (set at 300 volts F. S.) to monitor the voltage output of the AUX B+ Supply. Rotate the associated control knob in the auxiliary control panel thru its complete range. The tester meter indication should vary from approximately 10 on the scale to at least full scale. (Some overswing is permissible at both ends of the control adjustment).

Voltmeter Circuit: While still pressing the AUX B+ ADJ. button set the control to give a mid-scale reading on the meter. Release the AUX B+ ADJ. button and press button #2. The meter should read mid-scale ± 2 division. This is a check of the auxiliary B+ supply metering circuit which is separate from the main metering circuits. If the reading is out of tolerance, check R-320, 3 megohm ± 1%.

Line Regulation: While holding down button #2 vary the line voltage from 115 to 125 then to 105. The meter readings at 105 and 125 volts should not vary more than ± 3 divisions from the reading at 115 volts line.

Load Regulation: Set line voltage at 105 volts. Push button #2. Note the reading on the meter (it should still be at mid-scale, from the previous steps). This is a 150 volt indication at a low output current. While holding button #2, press button #4. The meter will indicate the output voltage with rated output current being drawn from the supply. The deviation between the two readings should not exceed ± 3 divisions.

If indications during the above tests are not proper, check V106, 6203, V104, 6CL and V107B, 6AU8 pentode section. Also check voltage and resistances at tube socke against values listed in the voltage and resistance chart.

If desired a 20,000 ohms per volt meter (Hickok Model 456 or equivalent) may be connected from pin 3 (+) to pin 6 (-) on any convenient socket to externally monitor the same output voltage being measured on the tester meter.

6.15 Meter Circuit Checks

The first test in Routine Calibration, together with the Trouble Shooting procedure listed below, form complete tests of the basic meter sensitivity, the meter shunts and the meter multipliers.

Each of these tests is designed to check a particular "primary component". However, additional components are also used in the test circuit and are "secondary components" in each test.

The following table lists the test card number, function, the primary component number and values, and the secondary components involved. When a number of tests give improper readings a comparison of the primary and secondary components involved will help isolate the defective part. Questionable parts can then be checked with a resistance bridge or an accurate ohmmeter. In each of the following tests insert the proper card in the switch press button #2. The meter should read mid-scale ± 2 divisions.

Card No.	Primary Component	Secondary Components
	Meter Shunts	
26	R207, 1280Ω± 1%	R206, R215, R216, R218, R226, R270, R241
27	R208, 640Ω± 1%	R206, R216, R-219, R223, R224, R225
28	R209, 320Ω± 1%	R206, R217, R220, R222, R-223
29	R210, 160Ω± 1%	R206, R216, R221, R225
30	R211, 80Ω± 1%	R206, R215, R216, R219, R226
31	R212, 40Ω± 1%	R206, R215, R216, R218, R220, R221
32	R213, 20Ω± 1%	R206, R216, R219, R223, R225, R241
33	R214, 10Ω± 1%	R206, R219, R224, R241
	Meter Multipliers	
34	R206, 25,344Ω± 1%	
35	R241, 1067Ω± 1%	R206
36	R230, 100K ± 1%	

6.16 Decade Resistor Checks

The following tests are similar to the Meter Circuit checks listed above except that the decade resistors are the "Primary Components". The "Secondary Components" involved are also listed.

a. Procedure for test cards 37 through 40:

Insert proper card into card switch, the left three short lamps should light. Press the FILAMENT STD ADJ. push button and set FILAMENT STD. ADJ switch for mid-scale indication on the tester meter. Press button #2, meter should read mid-scale ± 2 divisions.

Card No.	Primary Component	Secondary Component
37	R218, 10 Ω ± 1%	R206, R210, R213, R214
38	R217, 20 Ω ± 1%	Same as card 35
39	R216, 30 Ω ± 1%	Same as card 35
40	R215, 40 Ω ± 1%	Same as card 35

b. Procedure for test cards 41 and 42:

Insert proper test card into card switch. The left three short lamps should light. Press the FILAMENT STD ADJ push button and set FILAMENT STD ADJ switch for mid-scale indication on the tester meter. Press button #2. The tester meter should indicate mid-scale ± 2 divisions.

Card No.	Primary Component	Secondary Component
41	R219, 100 Ω ± 1%	R206, R210, R213, R214
42	R220, 200 Ω ± 1%	R206, R210, R213, R214

c. Procedure for test cards 43 through 48:

Insert proper test card. The extreme left short lamp should light. Press button #2. Read mid-scale ± 2 divisions.

Card No.	Primary Component	Secondary Component
43	R221, 300 Ω ± 1%	R206, R208, R209, R210 R211, R212
44	R222, 400 Ω ± 1%	R206, R207, R208, R209, R210, R212
45	R226, 1000 Ω ± 1%	R206, R207, R208, R211
46	R225, 2000 Ω ± 1%	R206, R207, R208, R209, R213, R214
47	R224, 3000 Ω ± 1%	R206, R209, R214, R241
48	R223, 4000 Ω ± 1%	R206, R207, R208, R212, R213, R241

d. Procedure for test Cards 49 thru 51 is the same as above except tolerance is mid-scale ± 4 divisions.

Card No.	Primary Component	Secondary Components
49	R227 & R231 in parallel 10K ± 5%	R207, R208, R213, R214
50	R228, 20K ± 5%	R207, R208, R209, R210, R211, R213
51	R229, 30K ± 5%	R208, R209, R210, R211, R212

6. 17 Main B+ Protection

The tester meter and the main B+ supply are protected against overloads by means of a slave relay protective circuit whose primary components are a line slave relay K101 and reedrelay K102. (See Section 5. 21 and Figure 15A). Cards 52A and 53A are used to check out part of this circuit as follows:

Insert Card 52A B+ PROTECTION, NO GO. Short lamps 1 and 2 should light. Press button #2. This applies a heavy load to the main B+ supply. The load is not excessive and should not shut off the tester.

Insert Card 53A B+ PROTECTION, GO. Short lamps 1 and 2 should glow. Press button #2. This applies an excessive load to the main B+ supply. The tester should shut off.

If either of these cards does not operate correctly, check reedrelay K102, capacitor C111 and resistor R160.

6. 18 Slave Relay Protective Circuit

If the tester shuts off after the tubes heat up and will not remain on after again pressing the ON-OFF switch, the trouble may be in the slave relay protective circuit and can be located by the following procedure:

While pressing the ON-OFF switch S105 in the ON position, check the voltage across the slave relay operating coil K101. This should be about 3 volts D. C. If this voltage is not present, the coil of the relay is probably being shorted out by a reedrelay K102, or diode CR107. Also check transistor Q2, and resistor R167.

The operating coil of reedrelay K102 is in the plate circuit of the 6CD6, V103, and therefore all main B+ current must pass through this coil. Any faulty conditions in the power supply which cause the current to be excessive will close the reedrelay contacts and short out the slave relay K101. The power supply voltage and resistance chart, Figure 20A, can be helpful in locating this type of trouble.

D. Miscellaneous Adjustment Procedures

6. 19 Adjustment of upper micro switch

The microswitch is adjusted at the factory prior to shipment, consequently adjustment should not be attempted unless absolutely necessary. There are two ways in which to properly adjust the micro switch. The first procedure requires two 1/8" diameter pins, but is more accurate than the second procedure.

WARNING

High Voltage is present across upper micro switch terminals. Disconnect line cord from power source before adjustment.

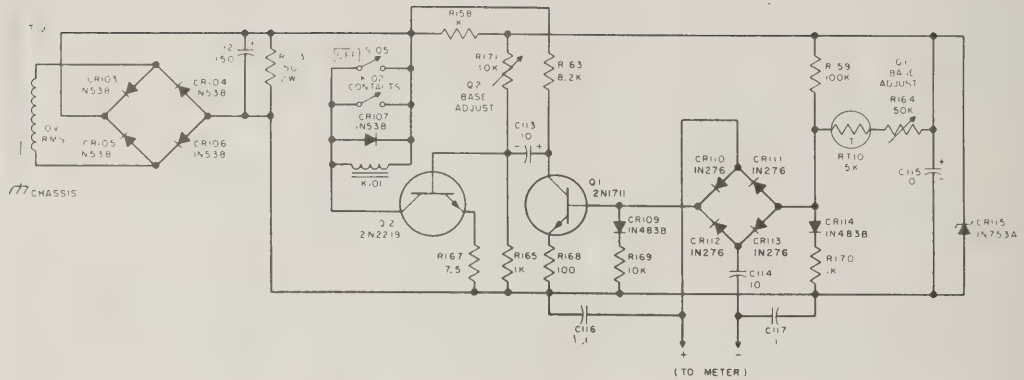

Figure 15A. Protection Circuit

6. 17 Main B+ Protection

The tester meter and the main B+ supply are protected against overloads by means of a slave relay protective circuit whose primary components are a line slave relay K101 and two reedrelays K102 and K104. (See Section 5. 21 and Figure 16). Cards 52A and 53A are used to check out part of this circuit as follows:

Insert Card 52A B+ PROTECTION, NO GO. Short lamps 1 and 2 should light. Press button #2. This applies a heavy load to the main B+ supply. The load is not excessive and should not shut off the tester.

Insert Card 53A B+ PROTECTION, GO. Short lamps 1 and 2 should glow. Press button #2. This applies an excessive load to the main B+ supply. The tester should shut off.

If either of these cards does not operate correctly, check reedrelay K102, capacitor C111 and resistor R160.

6. 18 Slave Relay Protective Circuit

If the tester shuts off after the tubes heat up and will not remain on after again pressing the ON-OFF switch, the trouble may be in the slave relay protective circuit and can be located by the following procedure:

While pressing the ON-OFF switch S105 in the ON position, check the voltage across the slave relay operating coil K101. This should be about 3 volts D. C. If this voltage is not present, the coil of the relay is probably being shorted out by a reedrelay K102 or K104 (See Figure 16).

The operating coil of reedrelay K102 is in the plate circuit of the 6CD6, V103, and therefore all main B+ current must pass through this coil. Any faulty conditions in the power supply which cause the current to be excessive will close the reedrelay contacts and short out the slave relay K101. The power supply voltage and resistance chart (Figure 20) can be helpful in locating this type of trouble.

Reedrelay K104 contains 2 coils. One of these is a hold coil which is energized at all times by means of the -150 volt supply. The current in this coil is maintained slightly less than that necessary to close the reedrelay contacts. If the -150 volt supply is operating incorrectly and allowing a voltage more negative than -150 volts, this may cause the reedrelay K104 contacts to close. This trouble also can be found by using the voltage and resistance chart (Figure 20).

D. Miscellaneous Adjustment Procedures

6. 19 Adjustment of upper micro switch

The microswitch is adjusted at the factory prior to shipment, consequently adjustment should not be attempted unless absolutely necessary. There are two ways in which to properly adjust the micro switch. The first procedure requires two 1/8" diameter pins, but is more accurate than the second procedure.

WARNING

High Voltage is present across upper micro switch terminals. Disconnect line cord from power source before adjustment.

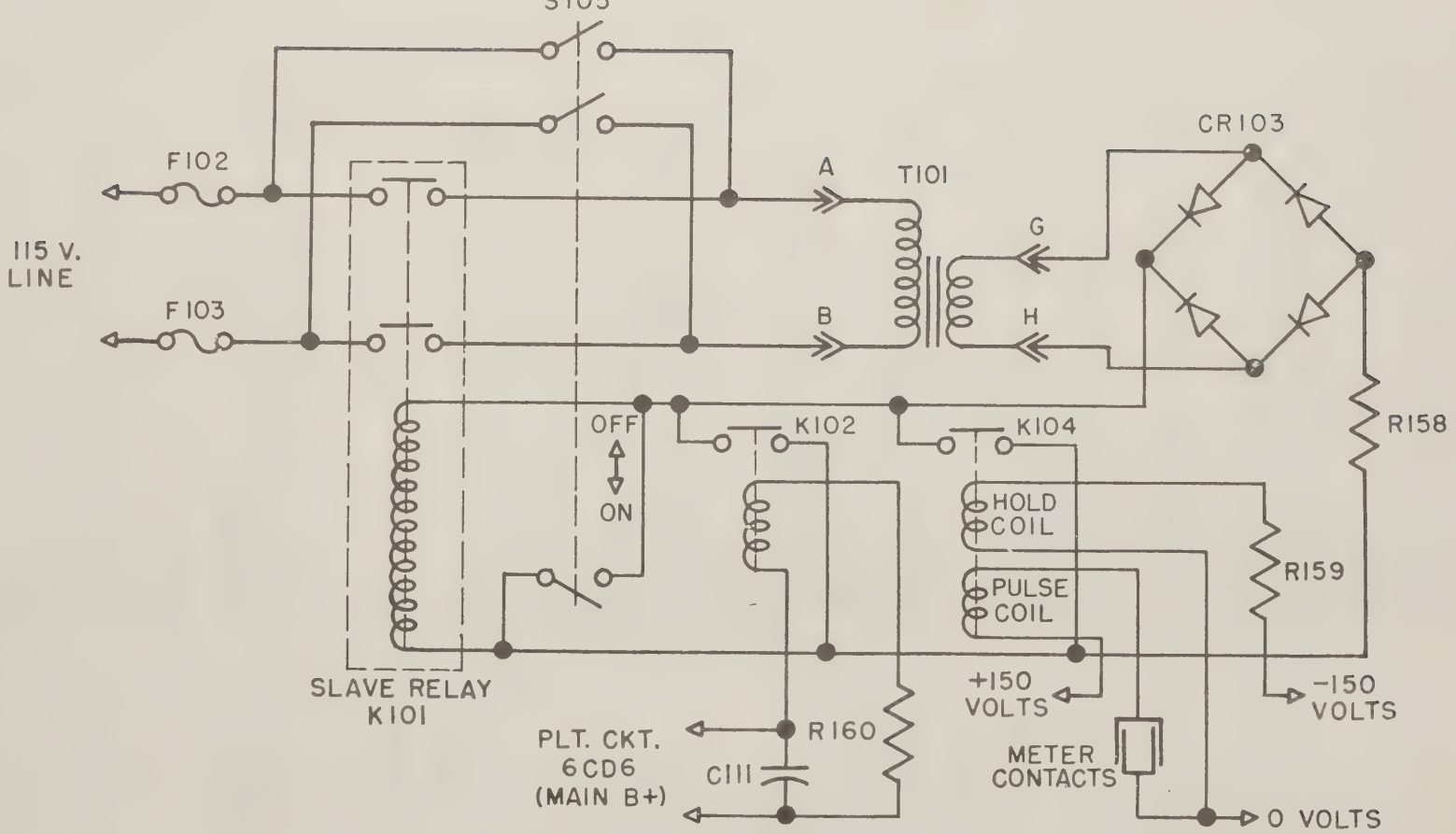

Figure 16 - Slave Relay Protective Circuit

a. First Procedure:

1. Remove card switch cover and insert non-test code card into card switch.

2. Insert two . 125 inch diameter (1/8 inch diameter) pins or drill shanks into the switch plate holes A-1 and L-1 to retain the code card. (See figure 19).

Figure 17 - Adjustment of Upper Micro Switch

3. Gently pull on the code card to remove all clearance between the two pins and holes A-1 and L-1 in the code card.

4. Adjust the micro switch inward (toward the card switch) with the adjustment screw (see Figure 17) until the micro switch actuates (an audible CLICK can be heard).

5. Reverse direction of the adjustment screw and move the micro switch out until it de-actuates (an audible CLICK will be heard). Approximately 1/2 turn of the adjustment screw will be necessary to de-activate a properly operating microswitch.

6. Connect tester to power source and press ON switch. Retest the action of the switch with the code card. Replace the card switch cover.

b. Second Procedure:

1. Remove card switch cover and insert code card into card switch.

2. Observe the code card holes through the row 1 holes in the top switch plate. The code card material should just disappear (. 005 inch) at the top of the row 1 switch

plate holes when the micro switch actuates (an audible CLICK will be heard). If adjustment is necessary, turn the adjustment screw. (See figure 19) until alignment is correct.

3. Connect the tester to power source and press ON switch. Retest the action of the switch with the code card. Replace the card switch cover.

6.20 Adjustment of Contact Pins

If code card will not come out of card switch when reject knob is pressed, a contact pin has moved above its normal position and is projecting through a hole in code card. Correct as follows:

a. Disconnect power source line cord. Remove switch cover.

b. Inspect tops of contact pins to see if one or more has moved above normal position. Use probe and carefully push pin or pins down until they clear code card.

c. Connect power source line cord and press ON switch. Reactivate card switch several times with same code card. Card must slide out each time reject knob is pressed.

E. Miscellaneous Parts Replacement

6.21 Replacement of Parts. The replacement instructions contained herein are limited to high mortality parts which are in some way unusual in installation. When trouble shooting procedures reveal defective parts and replacement is necessary, every effort must be made to duplicate original condition of equipment. Recalibrate tube tester after replacement of parts to assure accuracy of tube test readings.

6.22 Replacement of Tubes. Exercise care when removing or installing electron tubes to assure high quality performance from associated circuits. Observe handling precautions which are common to all vacuum tubes.

6.23 Replacement of Diodes. The diodes (CR401, CR402, CR403 and CR404 (Schematic Sheet 2), mounted on the terminal board are either matched pairs or all four are matched together and must be replaced as matched units. They shall be physically mounted in the same manner as those which are removed. Note direction of arrow printed on diodes and position replacement part in identical relationship to terminals.

C A U T I O N

Do not overheat diodes during soldering operation. Hold lead wire with pliers positioned between diode body and point being soldered.

6.24 Replacement of Upper Micro-Switch. (See figure 18). Unsolder leads from terminals on micro-switch. Remove nuts, washers and screws securing micro-switch to bracket. Remove microswitch. Exercise care not to lose small actuating pin in card switch. Install new micro-switch in reverse order of removal procedure.

6.25 Replacement of Lower Micro Switch. Remove screws and spacers securing terminal board to card switch. Lift terminal board away from card switch to gain access to lower micro switch. Unsolder leads to micro switch terminals. Remove nuts, washers, screws and defective micro switch. Position new micro switch in place and install it in reverse order of removal procedure. Check to see that switch actuating screw engages micro switch as required when card-reject knob is pressed. If adjustment is required, loosen lock nut, make adjustment, and retighten lock nut.

6. 26 Replacement of Card Switch Solenoid. (See Figure 19). Unsolder leads to terminals on solenoid. Disengage spring from clip on plunger and remove cotter pin and clip. Remove screws from face of panel and disengage solenoid from solenoid actuating arm. Install new solenoid and reconnect associated parts in the reverse order of removal.

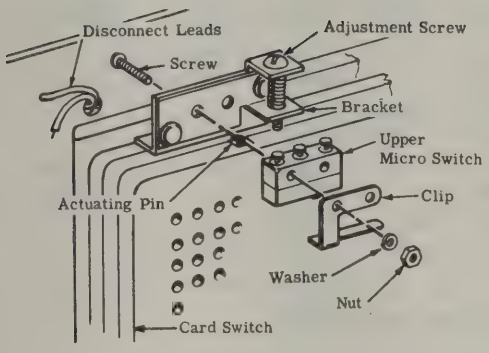

Figure 18 - Replacement of Upper Micro Switch

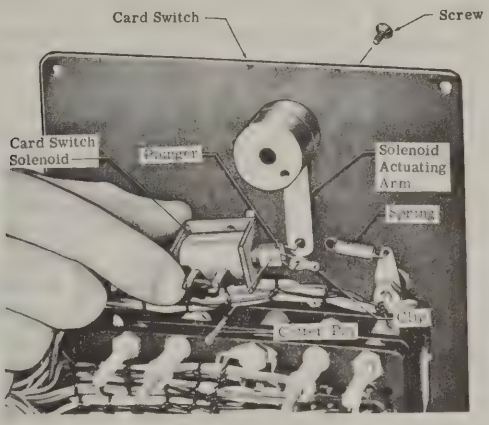

Figure 19 - Replacing Card Switch Solenoid

6. 27 Figures 22 through 31 have been provided to aid in the location of components.

VOLTAGE AND RESISTANCE MEASUREMENTS - AN/USM-118A-B

Note 1. Insert test card #23 in card switch. Press the AUX B+ ADJ Button and adjust the AUX B+ supply for mid-scale meter reading.

Note 2. All voltages measured with VTVM and are DC unless otherwise indicated. Zero voltage reference point is pin 1 of OA2 socket.

	SOCKET PIN NO.								
TUBE	1	2	3	4	5	6	7	8	9
6AU8	0 (0 Ω)	-2 (3M Ω)	150. 0 (70K Ω)	3. 1 AC (0 Ω)	3. 1 AC (0 Ω)	-86. 0 (40K Ω)	-87. 0 (160K Ω)	-28. 0 (115K Ω)	97 0 (10M Ω)
6CL6	150. 0 (650K Ω)	100. 0 (10M Ω)	405. 0 (95K Ω)	150. 0 (650K Ω)	150. 0 (650K Ω)	405. 0 (95K Ω)	150. 0 (650K Ω)	NC	NC
OA2WA	0 (0 Ω)	NC	NC	-150. 0 (34K Ω)	NC	NC	-150. 0 (34K Ω)	--	--
6AW8 A	-99 (50K Ω)	-100 (63K Ω)	0 (0 Ω)	3. 1 AC (0 Ω)	3. 1 AC (0 Ω)	-100. 0 (60K Ω)	-100. 0 (70K Ω)	-55. 0 (60K Ω)	121. 0 (600K Ω)
6CD6	NC	156. 0 (80K Ω)	150. 0 (80K Ω)	NC	121. 0 (580K Ω)	NC	150. 0 (80K Ω)	275. 0 (Infinity Ω)	--
6C4WA	400. 0 (95K Ω)	NC	150. 0 (80K Ω)	150. 0 (80K Ω)	400. 0 (95K Ω)	260. 0 (350K Ω)	275. 0 (Infinity Ω)	--	--
6203	305. 0 AC (73 Ω)	NC	150. 0 (660K Ω)	150. 0 (660K Ω)	NC	--	406. 0 (100K Ω)	--	305. 0 AC (73Ω)
5U4 GB	NC	370. 0 (510K Ω)	NC	260. 0 AC (67 Ω)	NC	260. 0 AC (67 Ω)	NC	370. 0 (510K Ω)	--

Figure 20. Voltage and Resistance Data AN/USM-118A

TUBE	SOCKET PIN NUMBER								
	1	2	3	4	5	6	7	8	9
6AU6 V107	0 (0Ω)	-2 (3 M Ω)	150. 0 (70 KΩ)	3. 1 AC (0Ω)	3. 1 AC (0Ω)	-86. 0 (40KΩ)	-87. 0 (160KΩ)	-28. 0 (115 KΩ)	97. 0 (10 MΩ)
6CL6 V104	150. 0 (650 KΩ)	100. 0 (10 MΩ)	405. 0 (95 KΩ)	150. 0 (650 KΩ)	150. 0 (650 KΩ)	405. 0 (95 KΩ)	150. 0 (650 KΩ)	NC	NC
OA2WA V108	0 (0 Ω)	NC	NC	-150. 0 (34 KΩ)	NC	NC	-150. 0 (34 KΩ)	- - - -	- - - -
6AW8A V105	-99 (58 KΩ)	-100 (63 KΩ)	0 (0 Ω)	3. 1 AC (0 Ω)	3. 1 AC (0 Ω)	-99. 0 (58 KΩ)	-100. 0 (70 KΩ)	-55. 0 (60 KΩ)	121. 0 (680 KΩ)
6CD6 V103	NC	150. 0 (80 KΩ)	150. 0 (80 KΩ)	NC	121. 0 (580 KΩ)	NC	150. 0 (80 KΩ)	275. 0 (Infinity Ω)	- - - -
6C4WA V102	400. 0 (95 KΩ)	NC	150. 0 (80 KΩ)	150. 0 (80 KΩ)	400. 0 (95 KΩ)	260. 0 (350 KΩ)	275. 0 (Infinity Ω)	- - - -	- - - -
6203 V106	292. 0 AC (73 Ω)	NC	NC	150. 0 (650 KΩ)	150. 0 (650 KΩ)	- - - -	406. 0 (100 KΩ)	- - - -	292. 0 AC (73 Ω)
5U4GB V101	NC	356. 0 (510 KΩ)	NC	260. 0 AC (67 Ω)	NC	260. 0 AC (67 Ω)	NC	356. 0 (510 KΩ)	- - - -

Figure 20A. Voltage and Resistance Data AN/USM-118B

CALIBRATION AND MAINTENANCE TEST CARDS

CARD	1	METER
CARD	2	SHORT 2 MEG NO GO
CARD	3	SHORT 1 MEG GO
CARD	4	SHORT 20 MEG NO GO
CARD	5	SHORT 10 MEG GO
CARD	6	FIXED BIAS CAL NEG
CARD	7	FIXED BIAS CAL POS
CARD	8	MAIN B+ CALIB
CARD	9	GM BAL LOW IB
CARD	10	GM BAL HI IB
CARD	11	SIG REG AND AMPL
CARD	12	FIL. STAND. ADJ.
CARD	13	FEED BACK B+
CARD	14A	6CD6 SCRN ADJ.
CARD	15A	MAIN B+ 10V
CARD	16A	MAIN B+ 20V
CARD	17A	MAIN B+ 20V
CARD	18A	MAIN B+ 60V
CARD	19A	MAIN B+ 110V
CARD	20A	MAIN B+ 160V
CARD	21A	MAIN B+ 210V
CARD	22A	MAIN B+ 260V
CARD	23	MAIN B+ REG.
CARD	24	DC FIL-CATH ACT.
CARD	25	AUX B+ REG.
CARD	26	METER SHUNT 1280Ω
CARD	27	METER SHUNT 640Ω
CARD	28	METER SHUNT 320Ω
CARD	29	METER SHUNT 160Ω
CARD	30	METER SHUNT 80Ω
CARD	31	METER SHUNT 40Ω
CARD	32	METER SHUNT 20Ω
CARD	33	METER SHUNT 10Ω
CARD	34	METER MULT 25340Ω
CARD	35	METER MULT 1070Ω
CARD	36	METER MULT 100KΩ
CARD	37	DECADE RES. 10Ω
CARD	38	DECADE RES. 20Ω
CARD	39	DECADE RES. 30Ω
CARD	40	DECADE RES. 40Ω
CARD	41	DECADE RES. 100Ω
CARD	42	DECADE RES. 200Ω
CARD	43	DECADE RES. 300Ω
CARD	44	DECADE RES. 400Ω
CARD	45	DECADE RES. 1000Ω
CARD	46	DECADE RES. 2000Ω
CARD	47	DECADE RES. 3000Ω
CARD	48	DECADE RES. 4000Ω
CARD	49	DECADE RES. 10KΩ
CARD	50	DECADE RES. 20KΩ
CARD	51	DECADE RES. 30KΩ
CARD	52A	RELAY NO GO
CARD	53A	RELAY DC GO

Figure 20B. List of Calibration & Test Cards Furnished

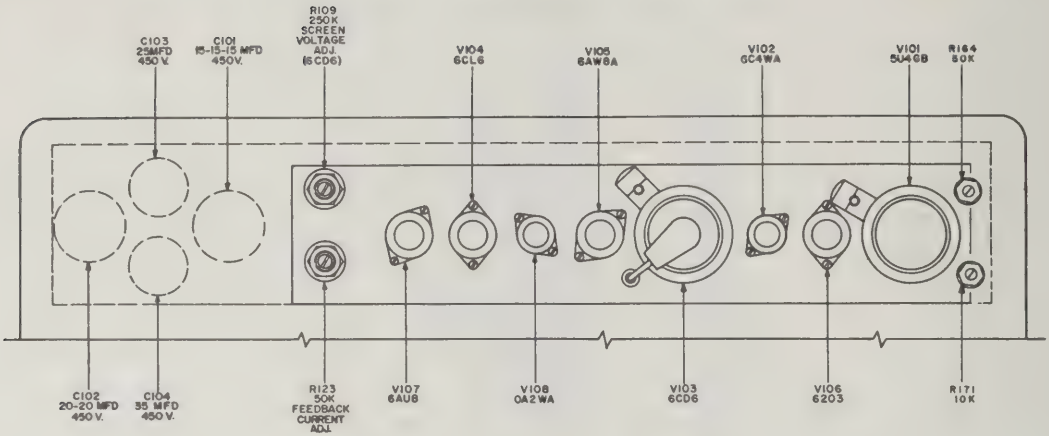

Figure 20C. Location of Tubes, Controls and Filter Condensers

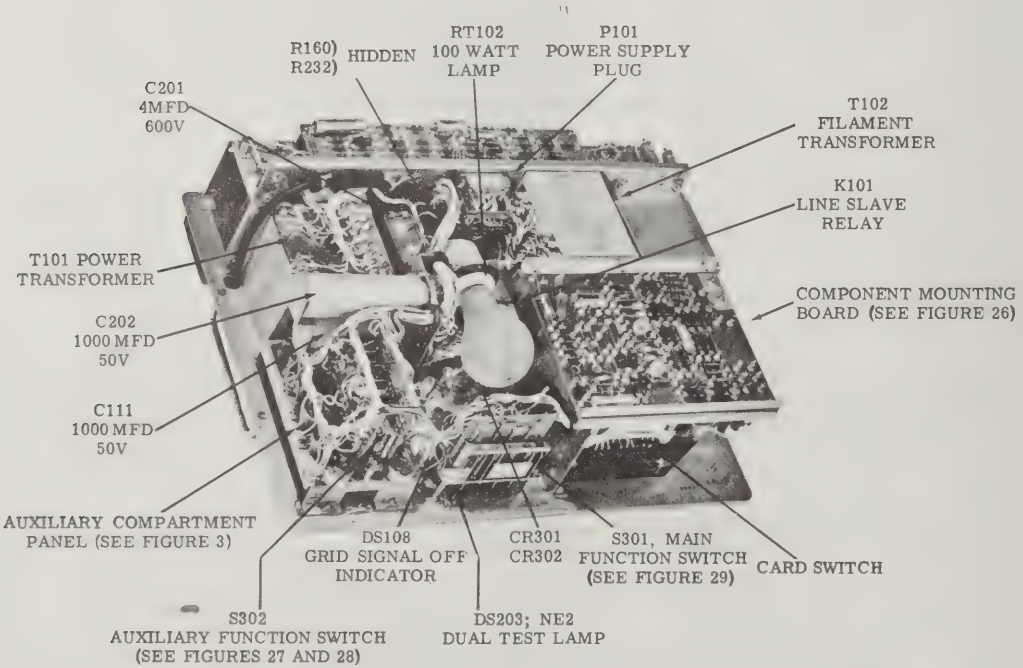

Figure 20D. Assembly Identification and Miscellaneous Parts

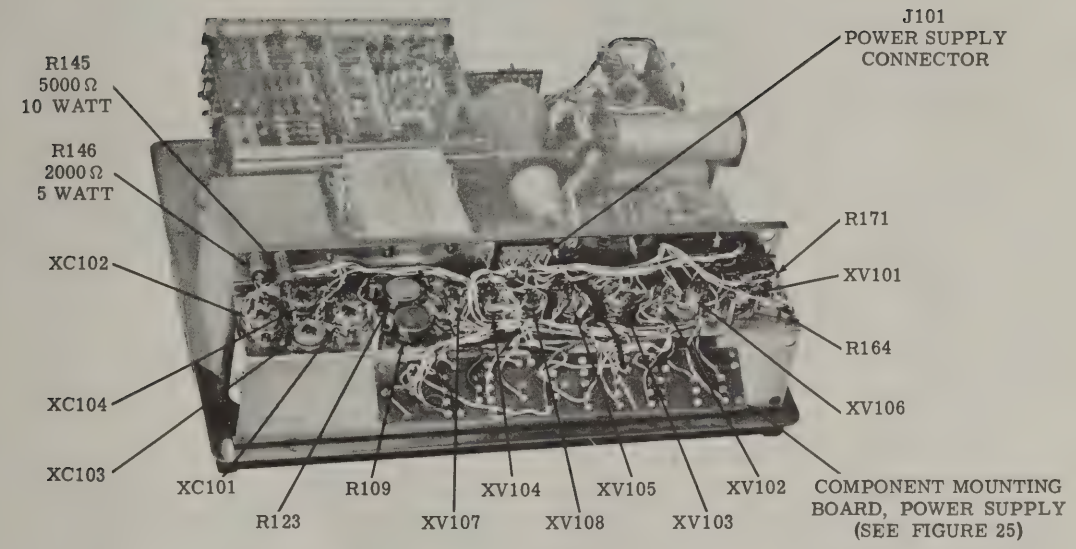

Figure 20E. Power Supply Component Location

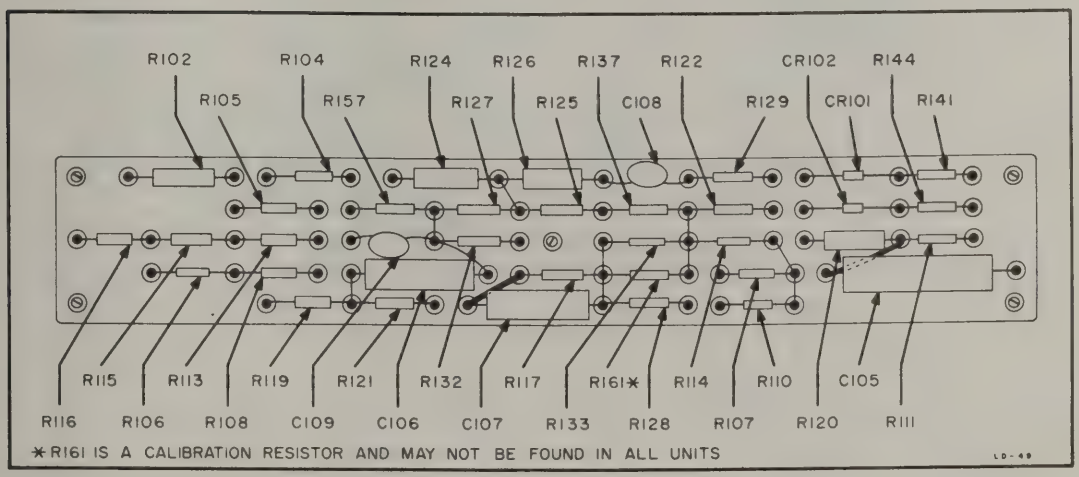

Figure 20F. Power Supply Component Board

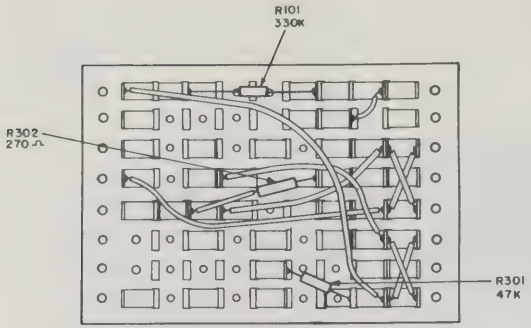

Figure 20G. Main Function Switch

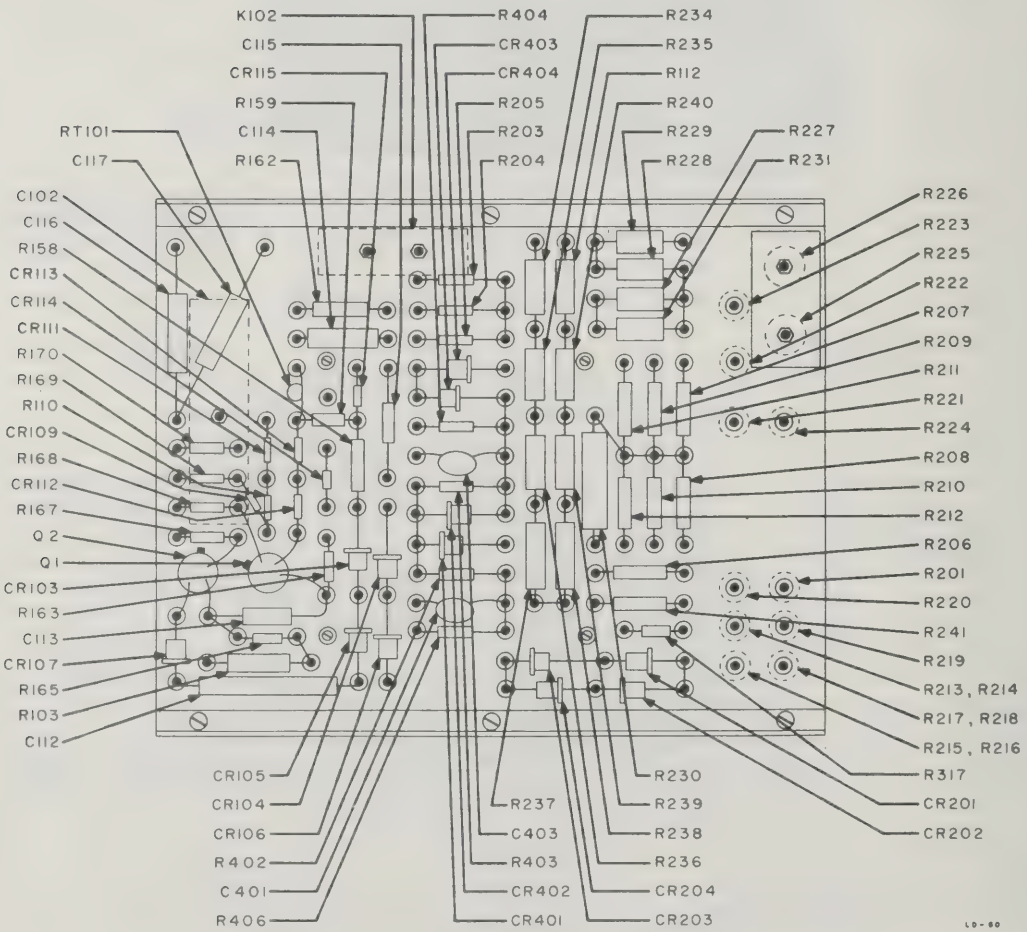

Figure 20H. Card Switch Component Mounting Board

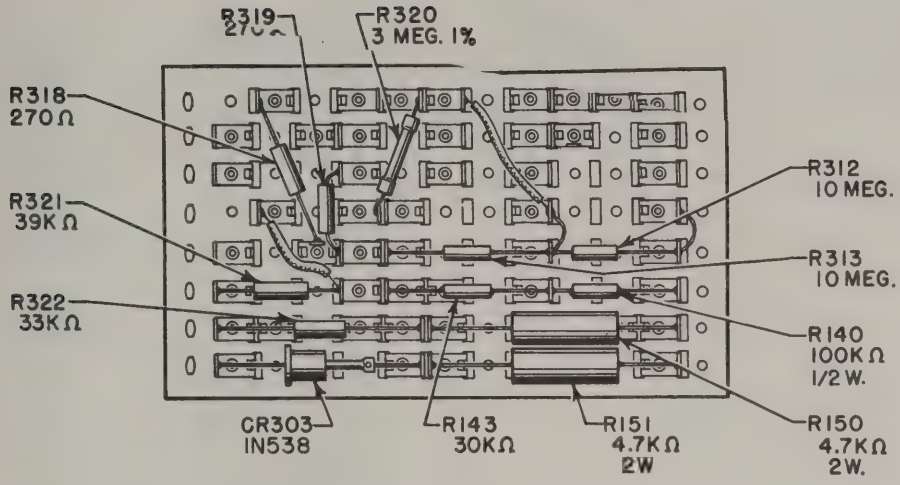

Figure 20I. Auxiliary Function Switch - Outside View

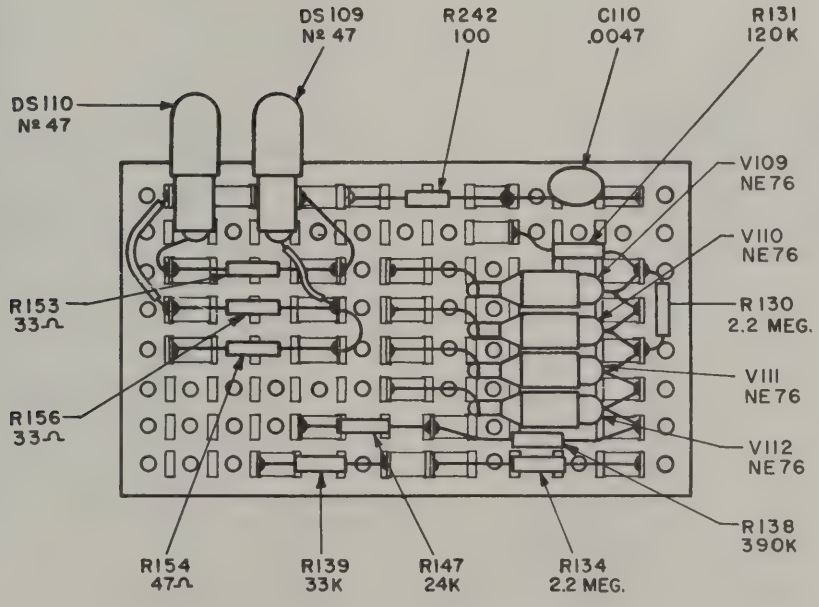

Figure 20J. Auxiliary Function Switch - Inside View

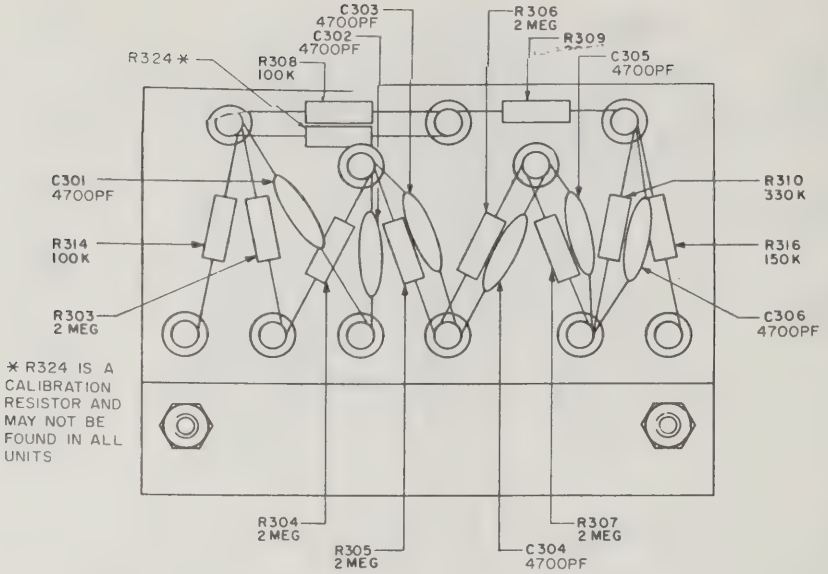

Figure 20K. Short Test Assembly

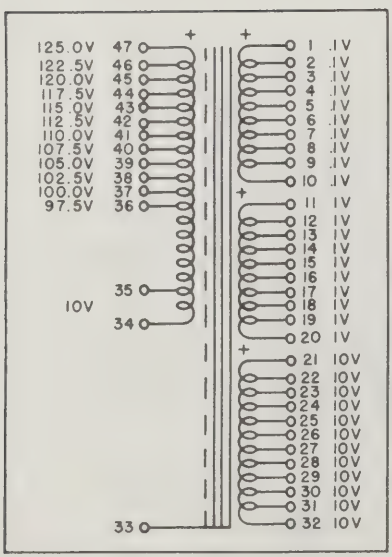

Filament Transformer

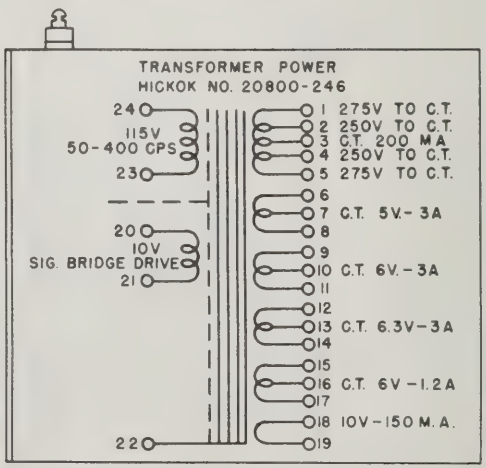

Power Transformer

Figure 20L. Transformer Diagrams

CALIBRATION AND MAINTENANCE TEST CARDS

CARD 1 METER
CARD 2 SHORTS 2 MEG NO GO
CARD 3 SHORTS 1 MEG GO
CARD 4 SHORTS 20 MEG NO GO
CARD 5 SHORTS 10 MEG GO
CARD 6 FIXED BIAS CAL NEG
CARD 7 FIXED BIAS CAL POS
CARD 8 MAIN B PLUS CALIB
CARD 9 GM BAL LOW IB
CARD 10 GM BAL HI IB
CARD 11 SIG REG AND AMPL
CARD 12 FIL. STAND. ADJUST
CARD 13 FEEDBACK B PLUS
CARD 14A 6CD6 SCRN ADJUST
CARD 15 MAIN B PLUS 10 V
CARD 16 MAIN B PLUS 20 V
CARD 17 MAIN B PLUS 20 V
CARD 18 MAIN B PLUS 60 V
CARD 19 MAIN B PLUS 110 V
CARD 20 MAIN B PLUS 160 V
CARD 21 MAIN B PLUS 210 V
CARD 22 MAIN B PLUS 260 V
CARD 23 MAIN B PLUS REG
CARD 24 DC FIL-CATH ACT.
CARD 25 AUX B PLUS REG.
CARD 26 METER SHUNT 1280
CARD 27 METER SHUNT 640
CARD 28 METER SHUNT 320
CARD 29 METER SHUNT 160
CARD 30 METER SHUNT 80
CARD 31 METER SHUNT 40
CARD 32 METER SHUNT 20
CARD 33 METER SHUNT 10
CARD 34 METER MULT 25344
CARD 35 METER MULT 1067
CARD 36 METER MULT 100K
CARD 37 DECADE RES. 10
CARD 38 DECADE RES. 20
CARD 39 DECADE RES. 30
CARD 40 DECADE RES. 40
CARD 41 DECADE RES. 100
CARD 42 DECADE RES. 200
CARD 43 DECADE RES. 300
CARD 44 DECADE RES. 400
CARD 45 DECADE RES 1000
CARD 46 DECADE RES. 2000
CARD 47 DECADE RES. 3000
CARD 48 DECADE RES. 4000
CARD 49 DECADE RES. 10K
CARD 50 DECADE RES. 20K
CARD 51 DECADE RES. 30K
CARD 52A RELAY NO GO
CARD 53A RELAY DC GO

Figure 21. List of Calibration & Test Cards Furnished

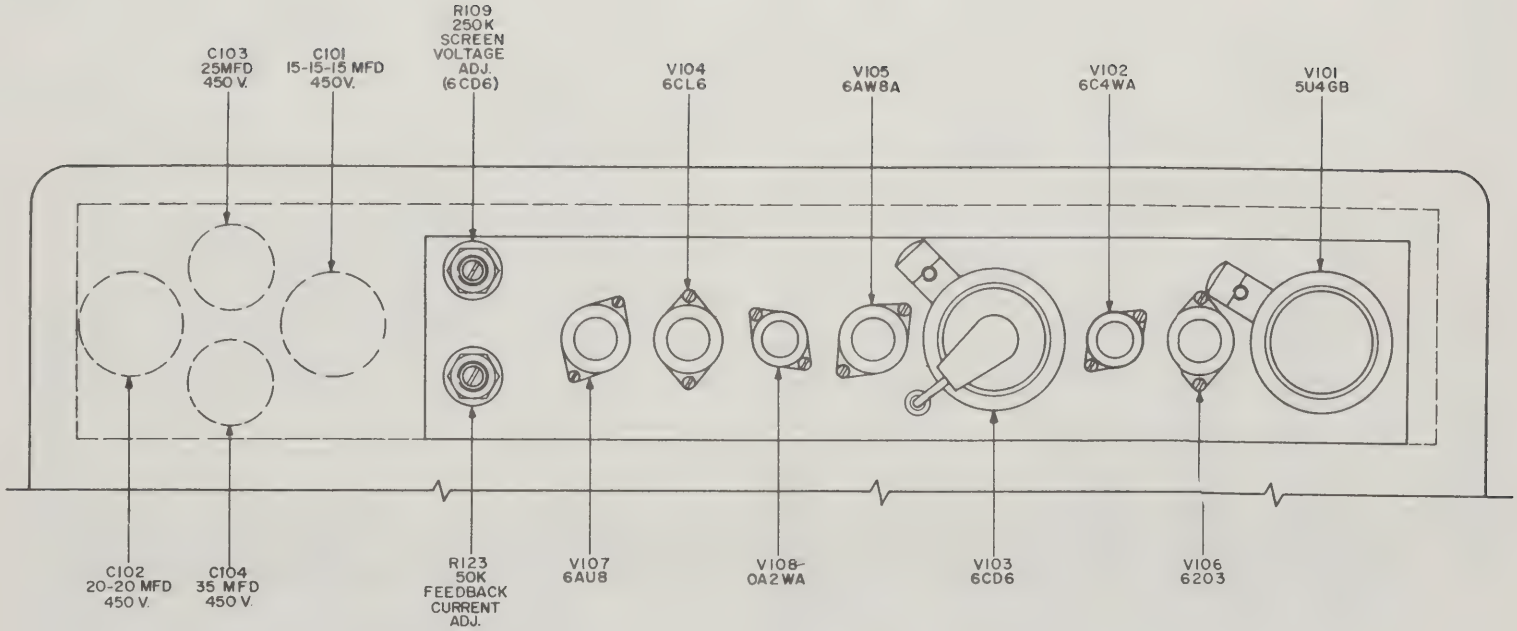

Figure 22 - Placement of Tubes, Controls
and Filter Condenser

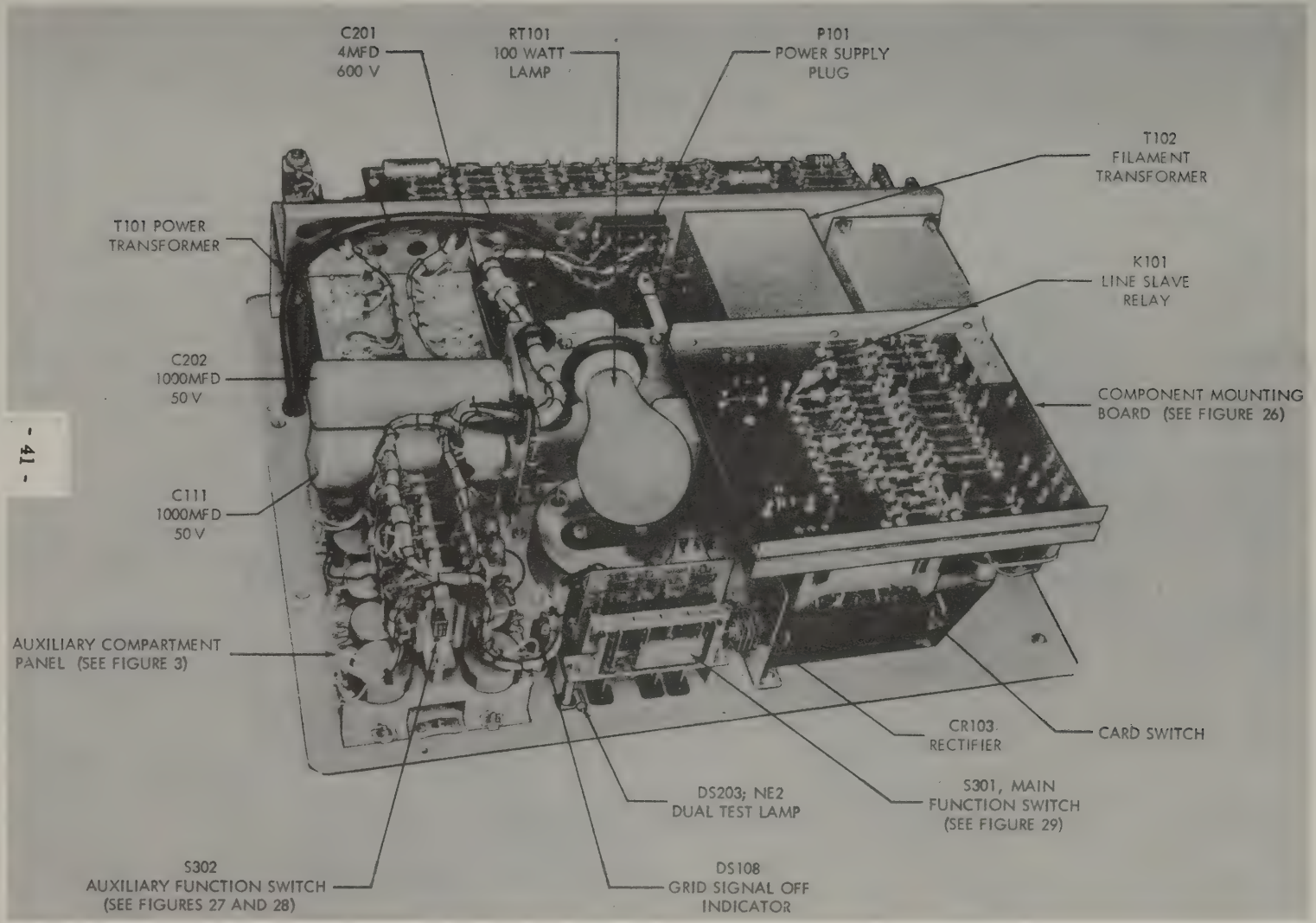

Figure 23 - Assembly Identification and Miscellaneous Parts

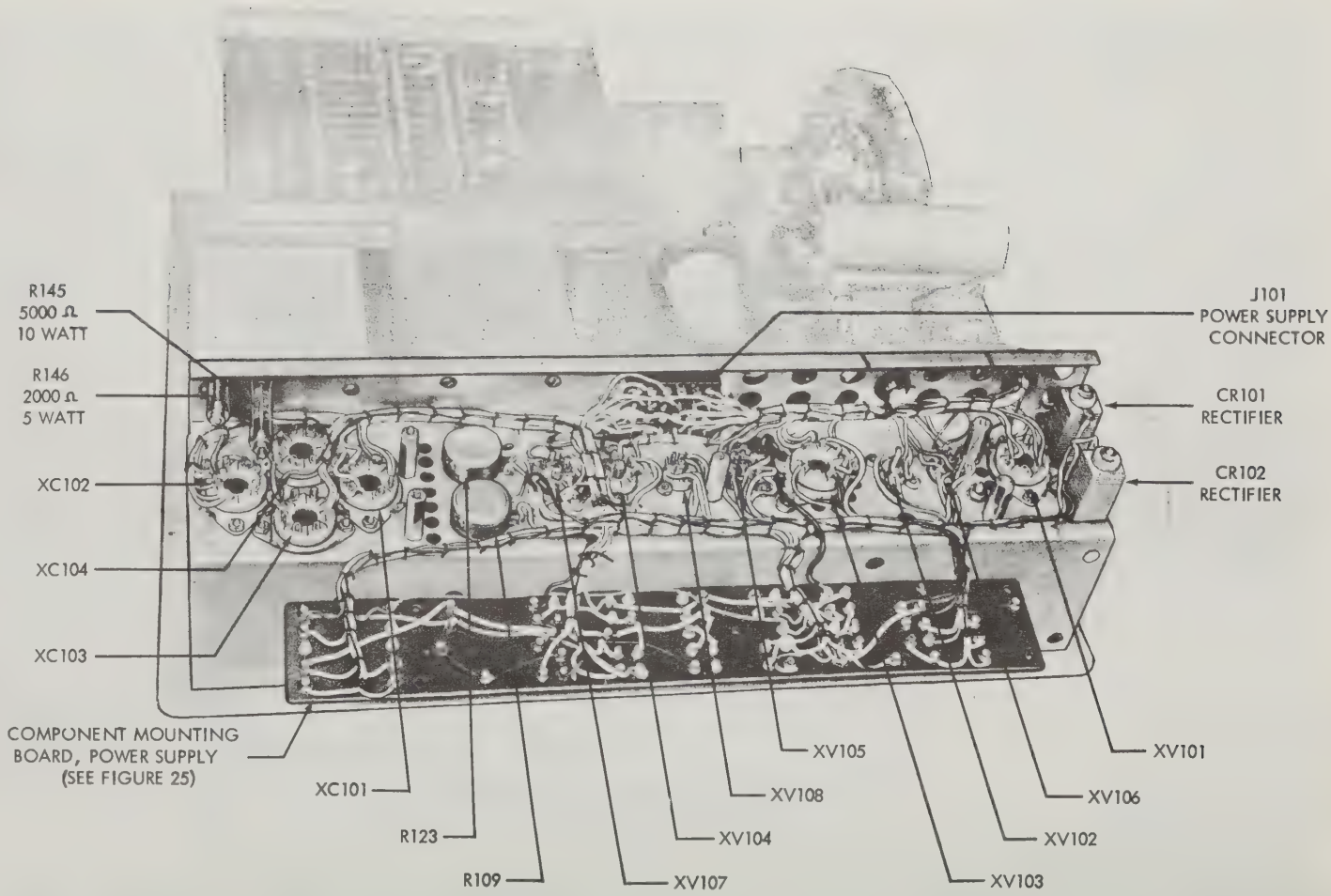

Figure 24 - Power Supply Component Location

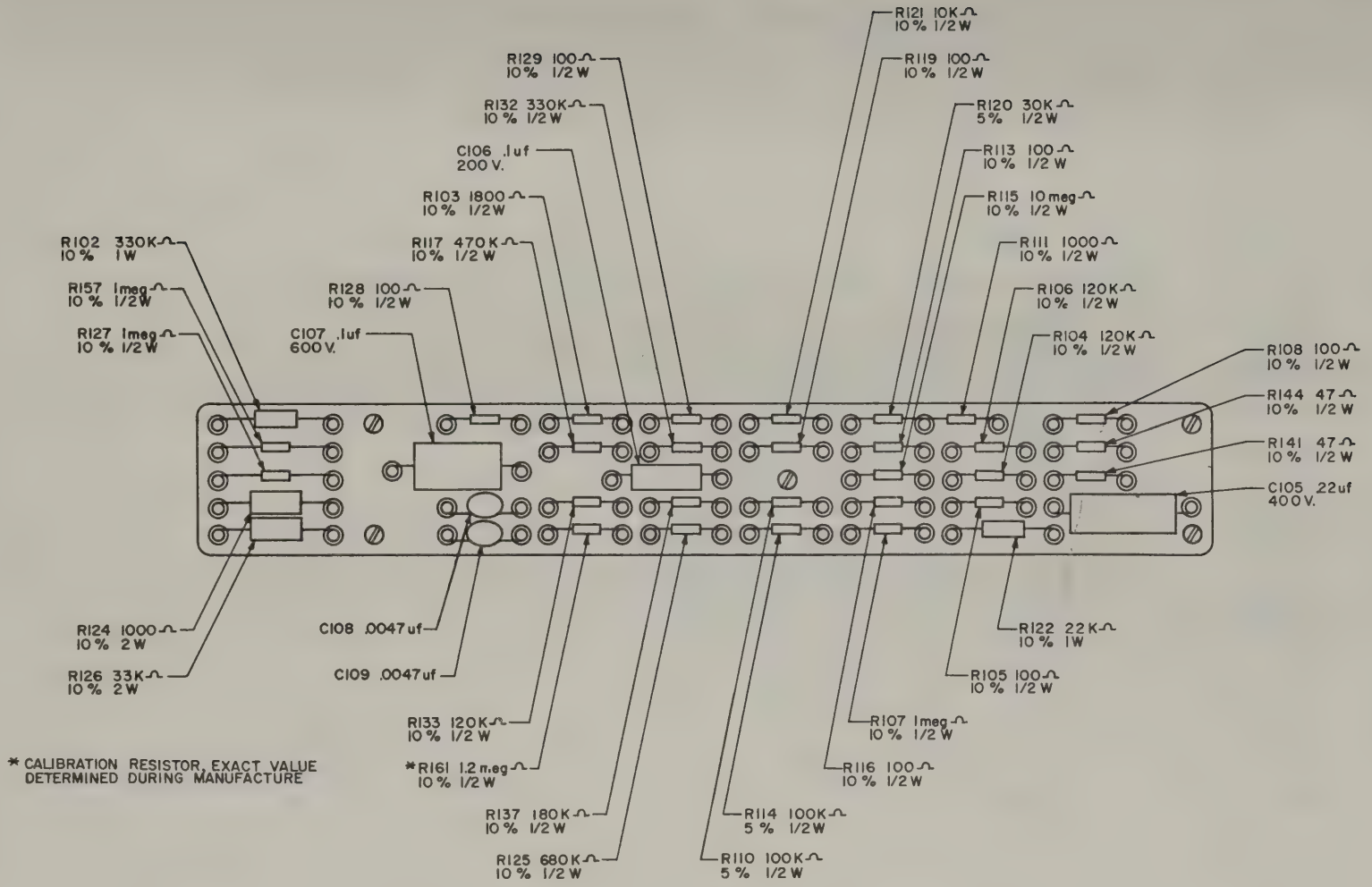

Figure 25 - Power Supply Component Board

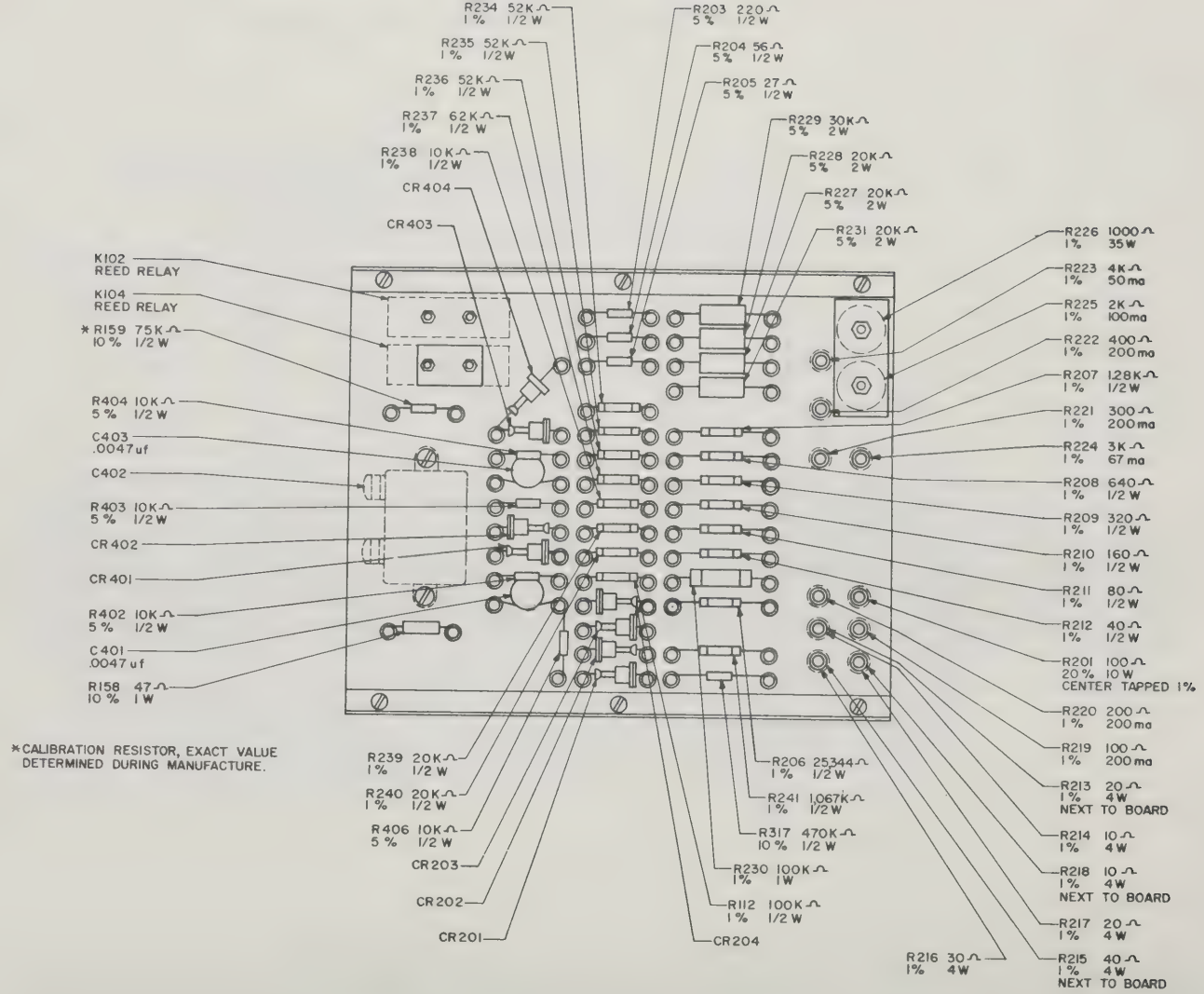

Figure 26 - Card Switch Component Mounting Board

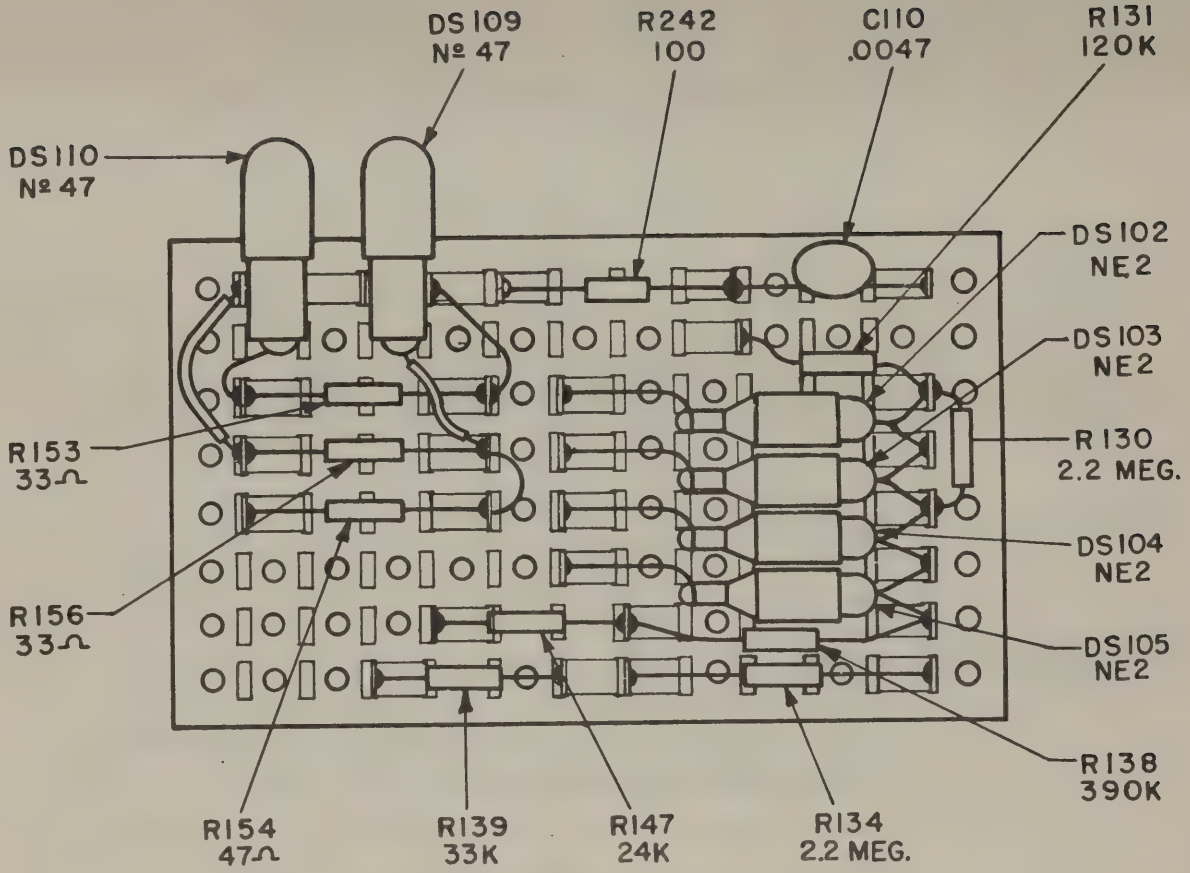

Figure 27 - Auxiliary Function Switch - Inside View

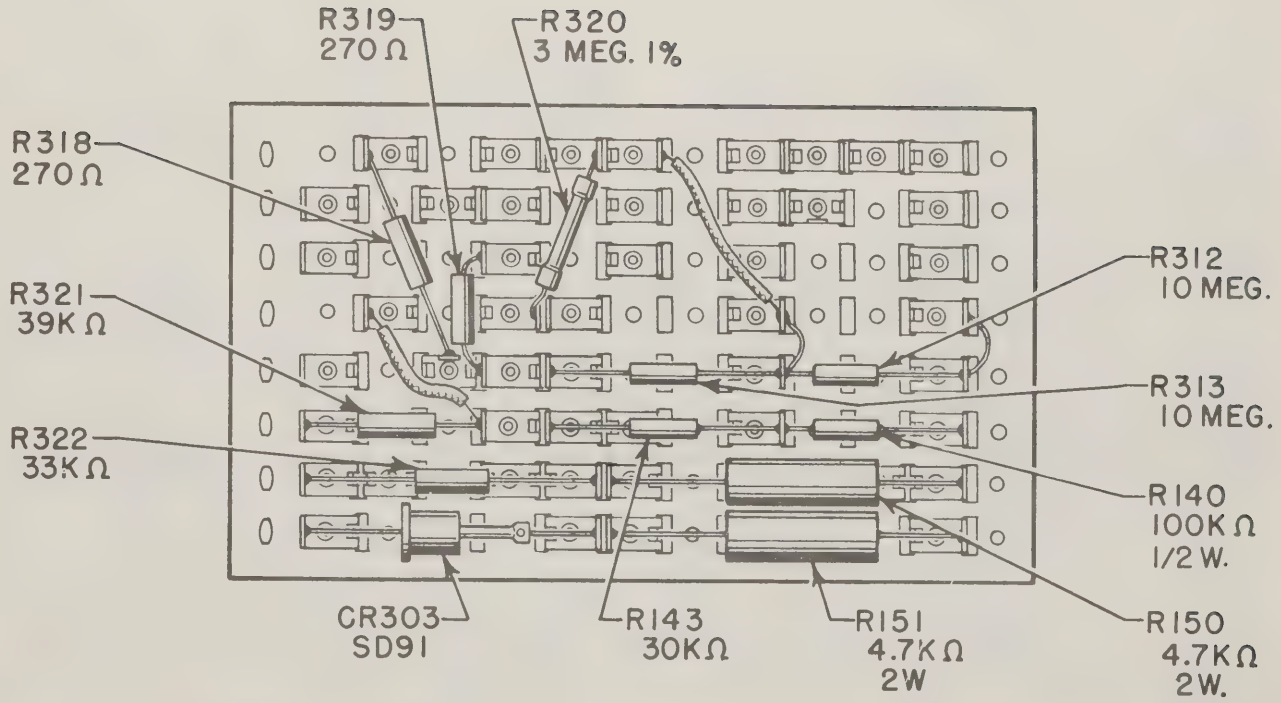

Figure 28 - Auxiliary Function Switch - Outside View

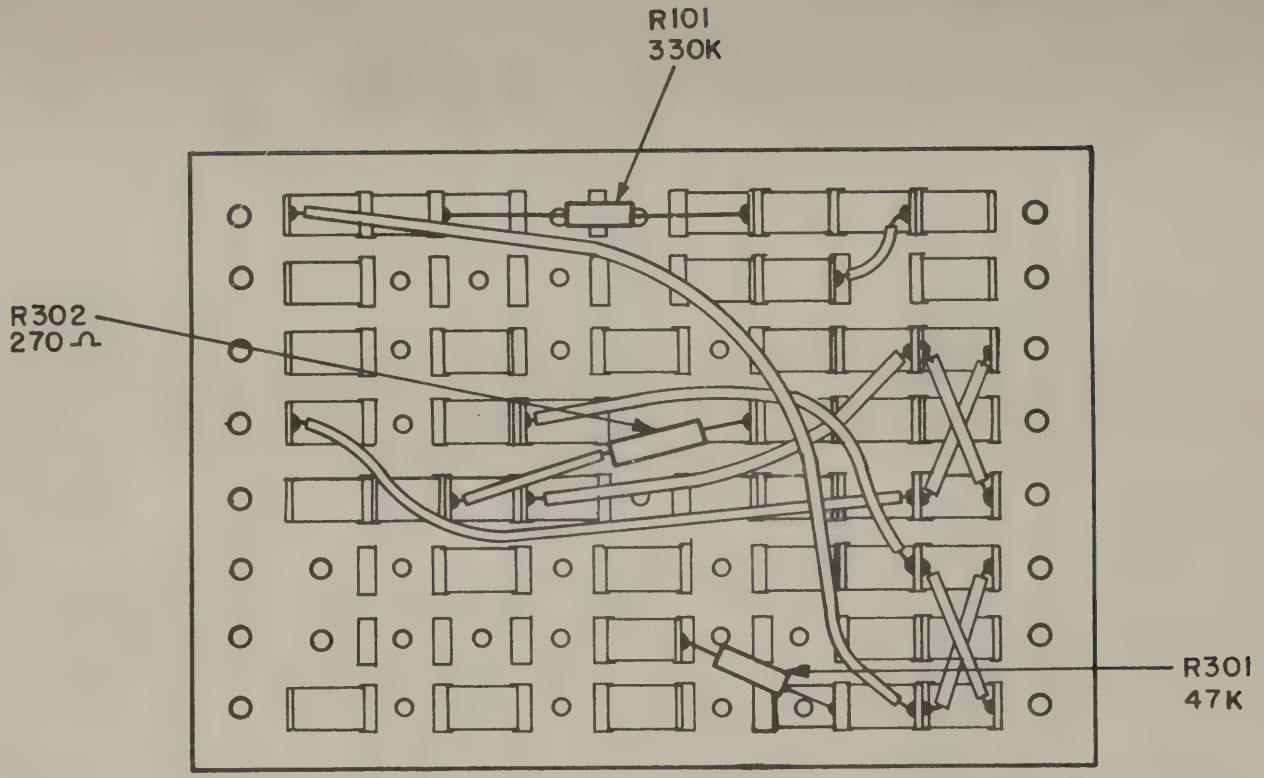

Figure 29 - Main Function Switch

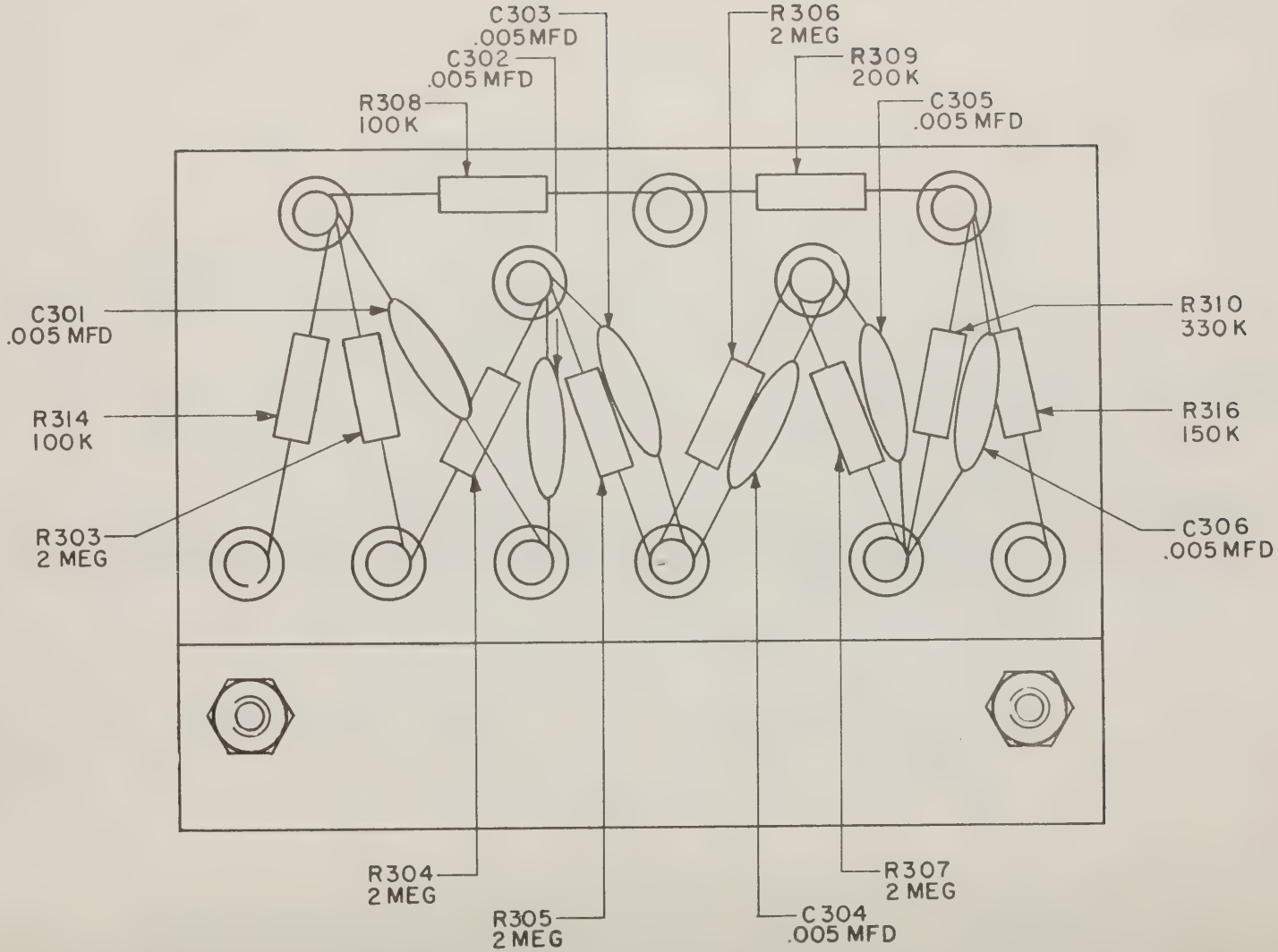

Figure 30 - Short t Assembly

NOTICE

Equipments supplied to the Bureau of Ships under nomenclature Electron Tube Test Set, AN/USM-118A on Contract Number NObsr 85003 are identical with the Hickok Electrical Instrument Company Model 1234A Cardmatic Tube Tester. All references to Model 1234A in this publication or in the basic instruction manual which it supplements are also applicable to the AN/USM-118A.

PURPOSE

This publication provides a parts list suitable for use by Navy personnel when servicing or ordering replacement parts for Electron Tube Test Set, AN/USM-118A manufactured by The Hickok Electrical Instrument Company.

The material contained herein supplements the information provided in the manufacturer's standard Instruction Manual for Model 1234A as supplied with the equipment.

The basic publication contains six (6) sections covering general information, calibration, operation, circuit theory and maintenance. Section number 7 has therefore been assigned to the supplementary parts list.

Figure numbers appearing in the parts list refer to the illustrations in the basic publication.

7. PARTS LIST

7.1 Introduction

Reference designations have been assigned to identify all maintenance parts of the equipment. They are used for marking the equipment (adjacent to the part they identify when practical) and are included on drawings, diagrams and the parts list. The letters of a reference designation indicate the kind of part (generic group), such as resistor, capacitor, electron tube, etc. The number differentiates between parts of the same group. Parts associated directly with the complete equipment are numbered from 1 to 99. Parts associated with the power supply circuit are numbered from 100 to 199; parts associated with automatic circuit selection from 200 to 299; parts associated with automatic tube pin selection from 300 to 399; and those associated with the test socket sub assembly from 400 to 499. Sockets associated with a particular plug-in device such as an electron tube, fuse or lamp are identified by a reference designation which includes the reference designation of the plug-in device. For example, the socket for electron tube V101 is designated XV101 and the socket for plug-in capacitor C101 is XC101.

7.2 Maintenance Parts List

Table 7-1 lists all maintenance parts for the equipment. Column 1 lists the reference designations in alpha numeric sequence. Column 2 refers to explanatory notes that may appear in paragraph 7.5 below. Column 3 gives the name and a brief description of all key parts (parts differing from any part previously listed in the table). The name and description are omitted for other parts and the notation "Same as (followed by the reference designation of the corresponding kay part)" is substituted.

Column 4 indicates how the part is used and gives its functional location in the equipment. It also includes the pictorial illustration, if any, on which the part is identified.

7.3 Stock Number Identification

Stock numbers of parts used in this equipment can be obtained by referring to the Stock Number Identification Table (SNIT) published by E. S. O.

7.4 List of Manufacturers.

Table 7-2 lists manufacturers of parts used in the equipment. The first column indicates the abbreviations used in Table 7-1 to identify manufacturers.

7.5 Notes

The following provides additional information about items listed in Table 7-1.

a. Neon Glow Lamps DS300 through DS305, are selected for uniform striking voltage and should be replaced as a set.

b. Diodes CR401 through CR404 are supplied as a matched set. Do not attempt to replace individual units.

TABLE 7-1 PARTS LIST

REF. DESIG.	NOTES	ITEM NAME AND DESCRIPTION	LOCATING FUNCTION
A1		PIN STRAIGHTENER ASSEMBLY, ELECTRON TUBE: combination 7 pin miniature and 9 pin noval on common mtg. base, Duro part no. D-279-S	Used to straighten and align tube pins before inserting in test socket. Figure 2.
C101		CAPACITOR, FIXED, ELECTROLYTIC: 3 sections, 15 μf, 450v dcw ea section, MIL-C-62A type no. CE53F150R	
C101A		part of C101	Input filter capacitor to extra high B+ supply. Figure 22
C101B		part of C101	Output filter capacitor to extra high B+ supply. Figure 22.
C101C		part of C101	Filter capacitor in +150v short test supply. Figure 22.
C102		CAPACITOR, FIXED, ELECTROLYTIC: 2 sections, 20 μf, 450 v dcw ea section, MIL-C-62A type no. CE52F200R	
C102A		part of C102	Filter capacitor in unregulated B+ supply circuit. Figure 22.
C102B		part of C102	Supplies power to cardswitch release solenoid L101. Figure 22.
C103		CAPACITOR, FIXED, ELECTROLYTIC: one 25 μf section, 450v dcw, MIL-C-62A type no. CE51F250R	Input capacitor to -150v regulated power supply. Figure 22.
C104		CAPACITOR, FIXED, ELECTROLYTIC: one 35 μf section, 450v dcw, MIL-C-62A type no. CE51F350R	Output capacitor to -150v regulated power supply. Figure 22.
C105		CAPACITOR, FIXED, PAPER DIELECTRIC: single 220,000 μμf section, ± 10%, 400v dcw, MIL-C-25C type no. CP05A1KE224K1	Filter capacitor in main regulated B+ power supply circuit. Figure 25.
C106		CAPACITOR, FIXED, PAPER DIELECTRIC: single 100,000 μμf section, ± 10%, 200 v dcw, MIL-C-25C type no. CP05A1KC104K1	Filter capacitor in grid circuit of V105B. Fig. 25.

TABLE 7-1 PARTS LIST (Cont)

REF. DESIG.	NOTES	ITEM NAME AND DESCRIPTION	LOCATING FUNCTION
C107		CAPACITOR, FIXED, PAPER DIELECTRIC: Single 100,000 μμf section, ± 10%, 600v dcw, MIL-C-25C type no. CP05A1KF104K1	Filter capacitor in grid circuit V107A aux. B+ supply. Figure 25.
C108		CAPACITOR, FIXED, CERAMIC DIELECTRIC: single 4700 μμf section, +100 - 20%, 500v dcw, Erie part no. ED-.0047	Filter capacitor in grid circuit of V107B of +150 regulated short test supply. Figure 25.
C109		Same as C108	Bypass capacitor to chassis from 0 volts. Figure 25.
C110		Same as C108	Filter capacitor in positive bias supply connected to R136. Figure 27.
C111		CAPACITOR, FIXED, ELECTROLYTIC: one 1000 μf section, 50 v dcw, hermetically sealed, Hickok part no. 3085-124	Filter capacitor in overload circuit of regulated main B+ supply circuit. Figure 23
C112 thru C200		not used	
C201		CAPACITOR, FIXED, PAPER DIELECTRIC: one 4 μf-section, ± 10%, 600v dcw, MIL-C-25C type no. CP70B1EF405K1	Input capacitor for rectifier under test. Fig. 23.
C202		same as C111	Cathode bypass capacitor for self bias on tube under test. Figure 23.
C203-C300		not used	
C301		same as C108	Stabilizing capacitor for short test neon DS301. Figure 30.
C302		same as C108	Stabilizing capacitor for short test neon DS302. Figure 30.
C303		same as C108	Stabilizing capacitor for short test neon DS303. Figure 30

TABLE 7-1 PARTS LIST (Cont)

REF. DESIG.	NOTES	ITEM NAME AND DESCRIPTION	LOCATING FUNCTION
C304		same as C108	Stabilizing capacitor for short test neon DS304. Figure 30.
C305		same as C108	Stabilizing capacitor for short test neon DS305. Figure 30.
C306		same as C108	Bypass capacitor for R310 in short test circuit, Figure 30.
C307 thru C400		not used	
C401		same as C108	Bypass capacitor in meter bridge circuit. Figure 26.
C402		CAPACITOR, FIXED, ELECTROLYTIC: one 1000 μf section, 6v dcw, hermetically sealed, Hickok part no. 3085-125	Differential capacitor in Gm bridge circuit. Figure 26.
C403		same as C108	Bypass capacitor across 10v RMS input to Gm bridge. Figure 26
CR101		RECTIFIER, METALLIC: Full-wave circuit, single phase, full-wave rectification, Int. Rect. part no. 61-24-33.	Rectifier in -150 regulated power supply circuit. Figure 24.
CR102		same as CR101	same as CR101
CR103		RECTIFIER, METALLIC: full-wave bridge, single phase, full-wave rectification, Int. Rect. part no. 59-1028.	Rectifier for power supply of slave relay K101. Figure 23.
CR104 thru CR200		not used	
CR201		SEMICONDUCTOR DEVICE, DIODE: silicon type, Int. Rect. part no. SD-91.	Part of dc filament rectifier. Figure 26.

TABLE 7-1 PARTS LIST (Cont)

REF. DESIG.	NOTES	ITEM NAME AND DESCRIPTION	LOCATING FUNCTION
CR202		same as CR201	(same as CR201)
CR203		same as CR201	(same as CR201)
CR204		same as CR201	(same as CR201)
CR205 thru CR300		not used	
CR301		same as CR201	Overload protection diode for meter M301. Figure 2.
CR302		same as CR201	same as CR301
CR303		same as CR201	Rectifier for filament standardization circuit. Figure 28.
CR304 thru CR400		not used	
CR401 402 403 404	b	SEMICONDUCTOR DEVICE SET, DIODE: silicon type, Hickok part no. 3870-42 (Matched set of 4)	Matched diodes in Gm bridge circuit.
DS101		LAMP, GLOW: neon gas type, 1/25w, 65v ac - 90 v dc striking voltage, Hickok part no. 12270-43	Blown fuse indicator lamp for fuse F101 in Aux B+ supply circuit. Figure 2.
DS102		same as DS101	Reference voltage regulator in +150v short test supply circuit. Figure 27
DS103		same as DS101	(same as DS102)
DS104		same as DS101	(same as DS102)
DS105		same as DS101	(same as DS102)
DS106		LAMP, INCANDESCENT: 6 to 8v, 0.15 amp, GE part no. 47	Cathode Activity test "On" indicator u/w XDS106. Figure 2.

TABLE 7-1 PARTS LIST (Cont)

REF. DESIG.	NOTES	ITEM NAME AND DESCRIPTION	LOCATING FUNCTION
DS107		same as DS106	Pilot lamp u/w XDS107. Figure 2.
DS108		same as DS106	Grid signal "OFF" indicator. Figure 2.
DS109		LAMP, INCANDESCENT: 6 to 8v, 0.15 amp, aged, Hickok part no. 12270-35	Part of signal bridge regulator circuit. Fig. 27.
DS110		same as DS109	(same as DS109)
DS111 thru DS200		not used	
DS201		same as DS101	Blown fuse indicator lamp for fuse F201 in dc filament supply circuit. Figure 2.
DS202		same as DS101	Blown fuse indicator lamp for fuse F202 in Gm bridge circuit. Figure 2.
DS203		same as DS101	"Dual test" indicator lamp. Figure 2.
DS204 thru DS300		not used	
DS301 thru DS305	a	LAMP SET, GLOW: neon gas type, 1/25w, ea lamp selected to be within 2v dc striking voltage of ea other, Hickok part no. 12270-2.	Short test indicator lamps. Figure 2.
E1		CALIBRATION CELL: octal tube base w/integrally mtd selected resistors and mercury cell capped w/permanent metal cap, plugs into front panel mtd octal socket, Hickok part no. 3047-2.	Standard voltage source for calibration of meter and short test circuits. Figure 4.
EV101		not used	
EV102		SHIELD, ELECTRON TUBE: accommodates RETMA tube envelope style T-5-1/2, heat dissipating type shield, Cinch part no. 150-15-20-137.	Shield and retainer for V102. Figure 22.

TABLE 7-1 PARTS LIST (Contd)

REF. DESIG.	NOTES	ITEM NAME AND DESCRIPTION	LOCATING FUNCTION
EV103		not used	
EV104		SHIELD, ELECTRON TUBE: accommodates RETMA tube envelope style T-6-1/2, heat dissipating type shield, Cinch part no. 151-15-30-098.	Shield and retainer for V104, Figure 22.
EV105		same as EV104	Shield and retainer for V105, Figure 22.
EV106		same as EV104	Shield and retainer for V106, Figure 22.
EV107		same as EV104	Shield and retainer for V107, Figure 22.
EV108		SHIELD, ELECTRON TUBE: accommodates RETMA tube envelope style T-5-1/2, heat dissipating type shield, Cinch part no. 150-15-30-138.	Shield and retainer for V108, Figure 22.
F101		FUSE, CARTRIDGE: 1/8 amp, 125vac max, time delay type, 5 sec min at 200% load time delay rating Littelfuse part no. 313.125	Protective fuse for Aux B+ supply u/w XF101. Figure 2
F102		FUSE, CARTRIDGE: 4 amp, 250v ac max, Littelfuse part no. 312004.	Line fuse u/w XF102. Figure 2.
F103		same as F102	Line fuse u/w XF103. Figure 2.
F104 thru F200		not used	
F201		FUSE, CARTRIDGE: 1 amp, 125v ac max, time delay type, 5 sec min at 200% load time delay rating, Littelfuse part no. 313001.	Protective fuse for dc filament supply u/w XF201. Figure 2.
F202		FUSE, CARTRIDGE: 1/4 amp, 250vac max, Littelfuse part no. 312.250.	Protective fuse for Gm bridge circuit u/w XF202. Figure 2.
H1		KNOB: push-on type, black phenolic body, Hickok part no. 2920-7.	Push buttons for S302A, B and C. Figure 3

TABLE 7-1 PARTS LIST (Cont)

REF. DESIG.	NOTES	ITEM NAME AND DESCRIPTION	LOCATING FUNCTION
H2		KNOB: push-on type, red phenolic body, Hickok part no. 2920-8	Push buttons for S302D and S302E, Figure 3
H3		KNOB: push-on type, black phenolic body, stamped w/numeral 2, Hickok part no. 2920-11	No. 2 Quality Test button on S301, Figure 2
H4		KNOB: push-on type, black phenolic body, stamped w/numeral 3, Hickok part no. 2920-12	No. 3 Gas Test button on S301, Figure 2
H5		KNOB: push-on type, red phenolic body, stamped w/numeral 4, Hickok part no. 2920-15	No. 4 Repeat Test button on S301 for dual section tubes, Figure 2
H6		KNOB: setscrew type, black phenolic body, Hickok part no. 11505-87	Card reject knob, Figure 3
H7		PUNCH, PAPER, HAND: steel, nickel-plated finish for 3/16 in. dia. holes, Mieth part no. 464	Hand punch for preparing special test cards. Figure 1
J101		CONNECTOR, RECEPTACLE, ELECTRICAL: 24 contacts, low loss plastic dielectric, Elco part no. RM22450-5	Power supply receptacle, Figure 24.
J102 thru J300		not used	
J301		CONNECTOR, RECEPTACLE, ELECTRICAL: 11 contacts, low loss plastic dielectric, Amphenol-Borg part no. 77MIP11T	Mounted on front panel under replaceable tube socket plate, Figure 2.
K101		RELAY, ARMATURE: contact arrangement 2A Ref Dwg Group 4, 5 amp resistive current rating at 115v ac max, Allied Control part no. TFH-S-26933	Line slave relay. Figure 23.
K102		RELAY, MAGNETIC: reed type relay, contact arrangement 1A - Ref Dwg. Group 4, 200 ma operating sensitivity, Hickok part no. 18400-17.	Protective reed relay for main B+ supply. Figure 26.
K103		not used	

TABLE 7-1 PARTS LIST (Cont)

REF. DESIG.	NOTES	ITEM NAME AND DESCRIPTION	LOCATING FUNCTION
K104		RELAY, MAGNETIC: reed type relay, contact arrangement 1A - Ref Dwg Group 4, -150v hold coil, +150v operating pulse coil thru 1800 ohms res. Hickok part no. 18400-18.	Protective reed relay for meter M301. Fig. 26
M301		METER, ELECTRON TUBE TESTER: Replacement part for 1234A Test Set, Hickok part no. 481-750	Tube quality indicator. Figure 2.
N1		CARD, NON TEST: unpunched test card, plastic material, Hickok part no. 3122-98	Used in cardswitch for shipping purposes.
N2		CARD SET, TEST: prepunched test card set for Western Electric type tubes, plastic material, Hickok part no. 3122-107	
N3		CARD SET, TEST: prepunched test card set for general purpose type tubes, plastic material, Hickok part no. 3122-108	
N4		CARD, BLANK, TEST: unpunched test card, plastic material, Hickok part no. 3122-97	Unpunched test card u/w hand punch to set up various test circuits on cardswitch.
P101		CONNECTOR, PLUG, ELECTRICAL: 24 contacts, 1 connector mating end, low loss plastic dielectric, Elco part no. RF22451X	Power supply connector plug. Figure 23
P102		CONNECTOR, PLUG, ELECTRICAL: 2 contacts, w/grounding contact screw mtd on shell, MIL-C-3767A type no. UP121M	Replacement plug for W101, Figure 1
P103 thru P400		not used	
P401		CONNECTOR, PLUG, ELECTRICAL: octal type plug mica filled phenolic body, Cinch part no. 13798.	Part of replaceable tube socket plate. Figure 2
R101		RESISTOR, FIXED, COMPOSITION: 330,000 ohms, ± 10%, 1/2 w, MIL-R-11C type no. RC20GF334K, AB part no. EB3341	Current limiting resistor for dual test indicator lamp DS203. Figure 29.

TABLE 7-1 PARTS LIST (Cont)

REF. DESIG.	NOTES	ITEM NAME AND DESCRIPTION	LOCATING FUNCTION
R102		RESISTOR, FIXED, COMPOSITION: 330 ohms, ± 10%, 1 w, MIL-R-11C type no. RC32GF331K, AB p/n EB 3311	Current limiting resistor for cardswitch release solenoid L101, Figure 25
R103		RESISTOR, FIXED, COMPOSITION: 1800 ohms, ± 10%, 1/2 w, MIL-R-11C type no. RC20GF182K, AB part no. EB1821.	Current limiting resistor for meter protective reed relay K109, Figure 25
R104		RESISTOR, FIXED, COMPOSITION: 120,000 ohms, ± 10% 1/2 w, MIL-R-11C type no. RC20GF124K, AB part no. EB1241	Part of bias adjust divide for V102, Figure 25
R105		RESISTOR, FIXED, COMPOSITION: 100 ohms, ± 10%, 1/2 w, MIL-R-11C type no. RC20GF101K, AB part no. EB1011.	Parasitic suppression resistor for V102. Figure 25.
R106		same as R104	(same as R104)
R107		RESISTOR, FIXED, COMPOSITION: 1 megohm, ± 10% 1/2 w, MIL-R-11C type no. RC20GF105K, AB part no. EB1051	Part of screen voltage divider for V105A. Figure 25
R108		same as R105	Parasitic suppression resistor for V103. Figure 25
R109		RESISTOR, VARIABLE: composition element, 250,000 ohms, ± 10%, 2w, std A taper, slotted single 1/4 in. dia. shaft 5/8 in. lg from mtg surface, normal torque, w/ shaft locking device, MIL-R-94B type no. RV4LAYSA254A	Screen voltage adjust control for V103. Figure 22 and Figure 24
R110		RESISTOR, FIXED, COMPOSITION: 100,000 ohms, ± 5%, 1/2 w, MIL-R-11C type no. RC20GF104J, AB part no. EB1045.	Screen load resistor for V105A. Figure 25.
R111		RESISTOR, FIXED, COMPOSITION: 1000 ohms, ± 10%, 1/2 w, MIL-R-11C type no. RC20GF102K, AB part no. EB1021.	Parasitic suppression resistor for V105A. Figure 25
R112		RESISTOR, FIXED, FILM: 100,000 ohms, ± 1%, 1w, MIL-R-10509C type no. RN70B1003F, Electra type no. DCM1	Part of regulated B+ voltage control stick. Figure 26.

TABLE 7-1 PARTS LIST (Cont)

REF. DESIG.	NOTES	ITEM NAME AND DESCRIPTION	LOCATING FUNCTION
R113		same as R105	Screen load resistor for V104. Figure 25.
R114		same as R110	(same as R107)
R115		RESISTOR, FIXED, COMPOSITION: 10 megohms, ± 10%, 1/2 w, MIL-R-11C type no. RC20GF106K, AB part no. EB1061	Plate load resistor for V107A, Figure 25
R116		same as R105	Parasitic suppression resistor for V104. Figure 25
R117		RESISTOR, FIXED, COMPOSITION: 470,000 ohms, ± 10%, 1/2 w, MIL-R-11C type no. RC20GF474K, AB part no. EB4741.	Part of bias divider network for V107A. Figure 25
R118		RESISTOR, FIXED, COMPOSITION: 180,000 ohms, ± 10%, 1/2 w, MIL-R-11C type no. RC20GF184K, AB part no. EB1841.	Current limiting resistor for blown fuse indicator lamp DS101. Mounted on XF101.
R119		same as R105	Parasitic suppression resistor for V105B. Figure 25
R120		RESISTOR, FIXED, COMPOSITION: 30,000 ohms, ± 5%, 1/2 w, MIL-R-11C type no. RC20GF303J, AB part no. EB3035	(same as R112)
R121		RESISTOR, FIXED, COMPOSITION: 10,000 ohms, ± 10%, 1/2 w, MIL-R-11C type no. RC20GF103K, AB part no. EB1031.	Transient suppression resistor for grid of V105B. Figure 25.
R122		RESISTOR, FIXED, COMPOSITION: 22,000 ohms, ± 10%, 1w, MIL-R-11C type no. RC32GF223K, AB part no. GB2231	Cathode bias resistor for V105 A and B. Figure 25
R123		RESISTOR, VARIABLE: composition element, 50,000 ohms, ± 10%, 2 w, std A taper, slotted single 1/4 in dia. shaft 5/8 in. lg from mtg surface, normal torque, w/ shaft locking device, MIL-R-94B type no. RV4LAYSA503A.	Feedback adjust control for regulated B+ control stick. Figure 23 and Figure 24.
R124		RESISTOR, FIXED, COMPOSITION: 1000 ohms, ± 10% 2w, MIL-R-11C type no. RC42GF102K, AB part no. HB1021.	Part of filter network for V102, V104 and V107 B+ supply. Figure 25

TABLE 7-1 PARTS LIST (Cont)

REF. DESIG	NOTES	ITEM NAME AND DESCRIPTION	LOCATING FUNCTION
R125		RESISTOR, FIXED, COMPOSITION: 680,000 ohms, ± 10%, 1/2 w, MIL-R-11C type no. RC20GF684K, AB part no. EB6841	Part of V107A screen voltage divider. Fig. 25
R126		RESISTOR, FIXED, COMPOSITION: 33,000 ohms, ± 10%, 2 w, MIL-R-11C type no. RC42GF333K, AB part no. HB3331	Plate load resistor for V107B. Figure 25
R127		same as R107	Bleeder resistor C101A and B. Figure 25.
R128		same as R105	Parasitic suppression resistor for V107A. Figure 25.
R129		same as R105	Parasitic suppression resistor for V107B. Figure 25.
R130		RESISTOR, FIXED, COMPOSITION: 2.2 megohms, ± 10%, 1/2 w, MIL-R-11C type no. RC20GF225K, AB part no. EB2251.	Part of voltage regulator circuit short test supply. Figure 27.
R131		same as R104	Part of positive bias supply network. Fig. 27
R132		same as R101	(same as R125)
R133		same as R104	(same as R117)
R134		same as R130	Transient suppression resistor for +150v shorts test supply. Figure 27.
R135		RESISTOR, VARIABLE: composition element, 2.5 megohms, ± 20%, 1/2 w, std A taper, slotted single 1/4 in. dia shaft 1/2 in. lg from mtg surface, normal torque, w/ shaft locking device, MIL-R-94B type no. RV5LAXSA255B.	Low sensitivity short test calibration control. Figure 3.
R136		RESISTOR, VARIABLE: composition element, 25,000 ohms, ± 10%, 1/2 w, std A taper, slotted single 1/4 in. dia shaft 1/2 in. lg. from mtg surface, normal torque, w/ shaft locking device, MIL-R-94B type no. RV5LAXSB253A.	Positive bias calibration control. Figure 3.

TABLE 7-1 PARTS LIST (Cont)

REF. DESIG.	NOTES	ITEM NAME AND DESCRIPTION	LOCATING FUNCTION
R137		same as R118	(same as R125)
R138		RESISTOR, FIXED, COMPOSITION: 390,000 ohms, ± 10%, 1/2 w, MIL-R-11C type no. RC20GF394K, AB part no. EB3941.	(same as R130)
R139		RESISTOR, FIXED, COMPOSITION: 33,000 ohms, ± 5%, 1/2 w, MIL-R-11C type no. RC20GF333J, AB part no. EB3335	Part of aux B+ voltage adjust divider. Fig. 27
R140		same as R110	Part of main B+ calibrate divider. Figure 28
R141		RESISTOR, FIXED, COMPOSITION: 47 ohms, ± 10%, 1/2 w, MIL-R-11C type no. RC20GF470K, AB part no. EB4701	Overload protective resistor for CR101. Figure 25
R142		RESISTOR, VARIABLE: composition element, 50,000 ohms, ± 10%, 2w, std A taper, slotted single 1/4 in. dia shaft 7/8 in. lg from mtg surface, normal torque, MIL-R-94B type no. RV4NAYSD503A	Aux B+ adjust control. Figure 3
R143		same as R120	(same as R140)
R144		same as R141	Overload protective resistor for CR102. Figure 25.
R145		RESISTOR, FIXED, WIRE WOUND: inductive winding, 5000 ohms, ± 10%, 10w, 350 deg C max continuous operating temp, 35 deg C ambient temp, Lectrohm type no. E10	Part of filter network for -150v supply. Figure 25
R146		RESISTOR, FIXED, WIRE WOUND: inductive winding, 2000 ohms, ± 10%, 5w, 350 deg C max continuous operating temp, 35 deg C ambient temp, Hickok part no. 18575-272	Current limiting resistor for V108. Fig. 25
R147		RESISTOR, FIXED, COMPOSITION: 24,000 ohms, ± 5% 1/2 w, MIL-R-11C type no. RC20GF243J, AB part no. EB2435	(same as R139)
R148		same as R123	Main B+ voltage calibrate control. Figure 3

TABLE 7-1 PARTS LIST (Cont)

REF. DESIG.	NOTES	ITEM NAME AND DESCRIPTION	LOCATING FUNCTION
R149		RESISTOR, VARIABLE: wire wound element, 10,000 ohms, ± 10%, 2w, std A taper, slotted single 1/4 in dia. shaft 5/8 in. lg from mtg surface, normal torque, w/ shaft locking device, MIL-R-19A type no. RA20LASB103A	Neg. bias adjust calibrate control. Figure 3
R150		RESISTOR, FIXED, COMPOSITION: 4700 ohms, ± 10% 2 w, MIL-R-11C type no. RC42GF472K, AB part no. GB4721	Resistor for bias "off" supply. Figure 28
R151		same as R150	Part of fixed bias supply divider. Figure 28
R152		RESISTOR, VARIABLE: wire wound element, 50 ohms, ± 10%, 2w, std A taper, slotted single 1/4 in. dia. shaft 5/8 in. lg from mtg. surface, normal torque, w/ shaft locking device, MIL-R-19A type no. RA20LASB500A	Signal regulation calibration control. Fig. 3
R153		RESISTOR, FIXED, COMPOSITION: 33 ohms, ± 5%, 1/2 w, MIL-R-11C type no. RC20GF330J, AB part no. EB3305	(same as DS109)
R154		same as R141	(same as DS109)
R155		RESISTOR, VARIABLE: wire wound element, 500 ohms, ± 10%, 2w, std A taper, slotted single 1/4 in. dia shaft 5/8 in. lg from mtg surface, normal torque, w/ shaft locking device, MIL-R-19A type no. RA20LASB501A	Signal amplitude calibration control. Figure 3
R156		same as R153	(same as DS109)
R157		same as R107	Bleeder resistor for C102A. Figure 25
R158		RESISTOR, FIXED, COMPOSITION: 27 ohms, ± 10%, 1/2 w, MIL-R-11C type no. RC20GF270K, AB part no. EB2701	Voltage dropping resistor for line slave relay K101. Figure 26
R159		RESISTOR, FIXED, COMPOSITION: 75,000 ohms, ± 10%, 1/2 w, MIL-R-11C type no. RC20GF753K AB part no. EB7531	Calibration resistor for hold cold on meter protection reed relay K104. Figure 26

TABLE 7 - 1 PARTS LIST (Cont)

REF. DESIG.	NOTES	ITEM NAME AND DESCRIPTION	LOCATING FUNCTION
R160		RESISTOR, FIXED, COMPOSITION: 47 ohms, ± 10% 2w, MIL-R-11C type no. RC42GF470K, AB part no. GB4701	Transient filter resistor for main B+ relay, K102.
R161		RESISTOR, FIXED, COMPOSITION: 1.2 megohms, ± 10%, 1/2 w, MIL-R-11C type no. RC20GF125K, AB part no. EB1251	Calibration resistor trimmer for R133. Figure 25
R162 thru R200		not used	
R201		RESISTOR, FIXED, WIRE WOUND: 100 ohms, ± 20% 10 w, center tapped, Hickok part no. 18575-264	Part of tube test filament circuit. Figure 26
R202		not used	
R203		RESISTOR, FIXED, COMPOSITION: 220 ohms, ± 5%, 1/2w, MIL-R-11C type no. RC20GF221J, AB part no. EB2215	Meter shunt used for tube leakage test. Figure 26
R204		RESISTOR, FIXED, COMPOSITION: 56 ohms, ± 5%, 1/2w, MIL-R-11C type no. RC20GF560J, AB part no. EB5605	(same as R203)
R205		RESISTOR, FIXED, COMPOSITION: 27 ohms, ± 5%, 1/2 w, MIL-R-11C type no. RC20GF270J, AB part no. EB2705	(same as R203)
R206		RESISTOR, FIXED, FILM: 25,344 ohms, ± 1%, 1/2 w, Electra type no. DCM1/2	Meter multiplier resistor for tube quality tests. Figure 26
R207		RESISTOR, FIXED, FILM: 1280 ohms, ± 1%, 1/2w, Electra type no. DCM1/2	Binary meter shunt for quality test. Figure 26.
R208		RESISTOR, FIXED, FILM: 640 ohms, ± 1%, 1/2w, Electra type no. DCM1/2	(same as R207)
R209		RESISTOR, FIXED, FILM: 320 ohms, ± 1%, 1/2w Electra type no. DCM1/2	(same as R207)

TABLE 7-1 PARTS LIST (Cont)

REF. DESIG.	NOTES	ITEM NAME AND DESCRIPTION	LOCATING FUNCTION
R210		RESISTOR, FIXED, FILM: 160 ohms, ± 1%, 1/2w Electra type no. DCM1/2	(same as R207)
R211		RESISTOR, FIXED, FILM: 80 ohms, ± 1%, 1/2w Electra type no. DCM1/2	(same as R207)
R212		RESISTOR, FIXED, FILM: 40 ohms, ± 1%, 1/2w, Electra type no. DCM1/2	(same as R207)
R213		RESISTOR, FIXED, WIRE WOUND: 20 ohms, ± 1%, 4w, Hickok part no. 18575-261	(same as R207)
R214		RESISTOR, FIXED, WIRE WOUND: 10 ohms, ± 1%, 4w, Hickok part no. 18575-260	(same as R207)
R215		RESISTOR, FIXED, WIRE WOUND: 40 ohms, ± 1%, 4w, Hickok part no. 18575-263	Decade resistor used for self bias, fixed bias or plate load for tube under test. Fig. 26
R216		RESISTOR, FIXED, WIRE WOUND: 30 ohms, ± 1%, 4w, Hickok part no. 18575-262	(same as R215)
R217		same as R213	(same as R215)
R218		same as R214	(same as R215)
R219		RESISTOR, FIXED, WIRE WOUND: 100 ohms, ± 1%, 10w, Hickok part no. 18575-265	(same as R215)
R220		RESISTOR, FIXED, WIRE WOUND: 200 ohms, ± 1%, 10w, Hickok part no. 18575-266	(same as R215)
R221		RESISTOR, FIXED, WIRE WOUND: 300 ohms, ± 1% 20w, Hickok part no. 18575-266	(same as R215)
R222		RESISTOR, FIXED, WIRE WOUND: 400 ohms, ± 1%, 35w, Hickok part no. 18575-268	(same as R215)
R223		RESISTOR, FIXED, WIRE WOUND: 4000 ohms, ± 1%, 10w, Hickok part no. 18575-271	(same as R215)

TABLE 7-1 PARTS LIST (Cont)

REF. DESIG.	NOTES	ITEM NAME AND DESCRIPTION	LOCATING FUNCTION
R224		RESISTOR, FIXED, WIRE WOUND: 3000 ohms, ± 1%, 35W, Hickok part no. 18575-270	(same as R215)
R225		RESISTOR, FIXED, WIRE WOUND: 2000 ohms, ± 1%, 50w, Hickok part no. 18575-269	(same as R215)
R226		RESISTOR, FIXED, WIRE WOUND: 1000 ohms, ± 1%, 50w, Hickok part no. 18575-259	(same as R215)
R227		RESISTOR, FIXED, COMPOSITION: 20,000 ohms, ± 5% 2w, MIL-R-11C type no. RC42GF203J, AB part no. GB2035	(same as R215)
R228		same as R227	(same as R215)
R229		RESISTOR, FIXED, COMPOSITION: 30,000 ohms, ± 5%, 2w, MIL-R-11C type no. RC42GF303J, AB part no. GB3035	(same as R215)
R230		RESISTOR, FIXED, FILM: 100,000 ohms, ± 1%, 1w, MIL-R-10509C type no. RN75B1003F, Electra type no. DCM1	(same as R206)
R231		same as R227	(same as R215)
R232		RESISTOR, FIXED, COMPOSITION: 100,000 ohms, ± 10%, 1/2w, MIL-R-11C type no. RC20GF104K, AB part no. EB 1041	Current limiter for blown fuse indicator neon DS202 for dc filament supply. Mtd on XF201
R233		RESISTOR, FIXED, COMPOSITION: 150,000 ohms, ± 10%, 1/2w, MIL-R-11C type no. RC20GF154K, AB part no. EB1541	Current limiter for blown fuse indicator neon DS202 for Gm bridge circuit. Mtd on XF202
R234		RESISTOR, FIXED, FILM: 52,000 ohms, ± 1%, 1/2w, Electra type no. DCM1/2	Part of regulated B+ voltage control stick. Figure 26
R235		same as R234	(same as R234)
R236		same as R234	(same as R234)

TABLE 7-1 PARTS LIST (Cont)

REF. DESIG.	NOTES	ITEM NAME AND DESCRIPTION	LOCATING FUNCTION
R237		RESISTOR, FIXED, FILM: 62,000 ohms, ± 1%, 1/2w, Electra type no. DCM1/2	(Same as R234)
R238		RESISTOR, FIXED, FILM: 10,000 ohms, ± 1%, 1/2w, MIL-R-10509C type no. RN70B1002F, Electra type no. DCM1/2	(Same as R234)
R239		RESISTOR, FIXED, FILM: 20,000 ohms, ± 1%, 1/2w, MIL-R-10509C type no. RN70B2002F, Electra type no. DCM1/2	(same as R234)
R240		same as R239	(same as R234)
R241		RESISTOR, FIXED, FILM: 1,067 ohms, ± 1%, 1/2w, Electra type no. DCM1/2	(same as R206)
R242		same as R105	Parasitic suppressor for tube under test when pos. bias is used. Figure 27
R243 thru R300		not used	
R301		RESISTOR, FIXED, COMPOSITION: 47,000 ohms, ± 10%, 1/2w, MIL-R-11C type no. RC20GF473K, AB part no. EB4731	Part of grid circuit of tube under gas test. Figure 29
R302		RESISTOR, FIXED, COMPOSITION: 270 ohms, ± 10% 1/w, MIL-R-11C type no. RC20GF271K, AB part no. EB2711	Substitute resistor for meter's impedance when meter M301 is in gas test circuit. Figure 29
R303		RESISTOR, FIXED, COMPOSITION: 2 megohms, ± 5%, 1/2w, MIL-R-11C type no. RC20GF205J, AB part no. EB2055	Part of short test indicator voltage divider circuit. Figure 30
R304		same as R302	(same as R303)
R305		same as R303	(same as R303)
R306		same as R303	(same as R303)
R307		same as R303	(same as R303)

TABLE 7-1 PARTS LIST (Cont)

REF. DESIG.	NOTES	ITEM NAME AND DESCRIPTION	LOCATING FUNCTION
R308		same as R110	Part of short test voltage calibrate circuit. Figure 30.
R309		RESISTOR, FIXED, COMPOSITION: 200,000 ohms, ±5%, 1/2w, MIL-R-11C type no. RC20GF204J, AB part no. EB2045	(same as R308)
R310		same as R101	Current limiting resistor for all short test lamps. Figure 30
R311		RESISTOR, VARIABLE: wire wound element, 100 ohms, ± 10%, 2w, std A taper, slotted single 1/4 in. dia. shaft 5/8 in. lg from mtg surface, normal torque, w/ shaft locking device, MIL-R-19A type no. RA20LASB101A	Meter calibration control. Figure 3
R312		same as R115	Part of short test indicator voltage divider circuit. Figure 28
R313		same as R115	(same as R312)
R314		same as R110	Part of high sensitivity short test divider circuit. Figure 30
R315		RESISTOR, VARIABLE: composition element, 50,000 ohms, ±10%, 1/2w, std A taper, slotted single 1/4 in. dia. shaft 1/2 in. lg from mtg surface normal torque, w/ shaft locking device, MIL-R-94B type no. RV5LAXSB503A	High sensitivity short test calibration control. Figure 3
R316		RESISTOR, FIXED, COMPOSITION: 150,000 ohms, ±5%, 1/2w, MIL-R-11C type no. RC20GF154J, AB part no. EB1545	(same as R314)
R317		same as R117	Plate load resistor for tube under test when Aux B+ supply is used. Figure 26
R318		same as R302	Substitute resistor for meter's impedance when meter M301 is in filament standardization test circuit. Figure 28.

TABLE 7-1 PARTS LIST (Cont)

REF. DESIG.	NOTES	ITEM NAME AND DESCRIPTION	LOCATING FUNCTION
R319		same as R302	Substitute resistor for meter's impedance when meter M301 is reading Aux B+ voltage. Fig. 28
R320		RESISTOR, FIXED, FILM: 3 megohms, ±1%, 1/2w, Electra type no. DCM1/2	Meter multiplier resistor used when meter M301 is reading Aux B+ voltage. Figure 28
R321		RESISTOR, FIXED, COMPOSITION: 39,000 ohms, ±10%, 1/2w, MIL-R-11C type no. RC20GF393K, AB part no. EB3931	Trimmer resistor on filament standardization control R323, Figure 28
R322		same as R139	Meter multiplier resistor for filament standardization test circuit. Figure 28
R323		same as R136	Filament standardization calibration control Figure 3
R324		RESISTOR, FIXED, COMPOSITION: 220,000 ohms, ±5%, 1/2w, MIL-R-11C type no. RC20GF224J, AB part no. EB2245	Calibration resistor used to trim R308. Fig. 30
R325 thru R400		not used	
R401		RESISTOR, VARIABLE: wire wound element, 3 ohms, ±10%, 2w, std A taper, slotted single 1/4 in. dia. shaft 7/8 in. lg from mtg surface, normal torque, MIL-R-19A type no. RA20NASD3R0A	GM bridge balance high current control. Fig. 3
R402		RESISTOR, FIXED, COMPOSITION: 10,000 ohms, ±5%, 1/2w, MIL-R-11C type no. RC20GF103J, AB part no. EB1035	Part of Gm bridge balance network. Figure 26
R403		same as R402	(same as R402)
R404		same as R402	(same as R402)
R405		RESISTOR, VARIABLE: composition element, 2500 ohms, ±10%, 2w, std A taper, slotted single 1/4 in. dia. shaft 7/8 in. lg from mtg surface, normal torque, MIL-R-94B type no. RV4NAYSD252A	Gm bridge balance low current control. Figure 3

TABLE 7-1 PARTS LIST (Cont)

REF. DESIG.	NOTES	ITEM NAME AND DESCRIPTION	LOCATING FUNCTION
R406		same as R402	(same as R402)
RT101		LAMP, INCANDESCENT: 120v, 100w, GE part no. 100A/RS	Protective device used in filament supply. Figure 23
RT102 thru RT199		not used	
S101		SWITCH ASSEMBLY, CARD: Hickok part no. 906-043	Prepunched card reading switch. Figure 2
S102		SWITCH, SENSITIVE: SPDT, plunger type actuator, Electrosnap part no. E4-109	Solenoid L101 actuating switch closed when card is inserted in cardswitch. Figure 17 and Figure 18
S103		SWITCH, SENSITIVE: SPDT, plunger type actuator, Micro Switch part no. V3-19	Solenoid L101 deactivating switch closed when cardswitch has traveled to full down position. Mtd on lower frame of cardswitch.
S104		not used	
S105		SWITCH, TOGGLE: 4 poles - 3 positions, 0.75 amp. - 115v dc resistive, 11 amps - 115v ac resistive, MIL STD type no. MS24525-27, Micro Switch part no. 4TL1-7	Power On-Off switch. Energizes and de-energizes line slave coil K101. Figure 2
S106		SWITCH, ROTARY: single section type, Hickok part no. 19912-441	Filament standardization adjust switch. Figure 3
S107 thru S300		not used	
S301		SWITCH, PUSH: four section ganged type, three plunger type actuators, Hickok part no. 19910-152	Main functions test switch. Figure 23
S302		SWITCH, PUSH: five section ganged type, five plunger type actuators, Hickok part no. 19910-153	Aux functions test switch. Figure 23

TABLE 7-1 PARTS LIST (Cont)

REF. DESIG.	NOTES	ITEM NAME AND DESCRIPTION	LOCATING FUNCTION
T101		TRANSFORMER, POWER, STEP-DOWN and STEP-UP: 115v - 50 to 400 CPS - single phase primary, secondary windings; 550v center tapped w/ taps at 25v and 525v 200 ma overall current rating, 10v at 150 ma, 10v at 75ma, 6.3v center tapped at 1.2 amp, 6v center tapped at 3 amp, 6v center tapped at 1.2 amp and 5v center tapped at 3 amp, Hickok part no. 20800-246	Power transformer. Figure 23
T102		TRANSFORMER, POWER, STEP-DOWN: 125v - 50 to 400 CPS - single phase primary, secondary windings; 110v tapped at 10v - 20v - 30v - 40v - 50v - 60v - 70v - 80v - 90v and 100v, 9v tapped at 1v - 2v - 3v - 4v - 5v - 6v - 7v and 8v, 0.9v center tapped at 0.1v - 0.2v - 0.3v - 0.4v - 0.5v - 0.6v - 0.7v and 0.8v, Hickok part no. 20800-247	Filament transformer for tubes under test. Figure 23
V101		ELECTRON TUBE: type no. 5U4GB, RCA	Unregulated B+ supply rectifier. Figure 22
V102		ELECTRON TUBE: type no. 6C4, RCA	Screen voltage regulator tube for V103. Figure 22
V103		ELECTRON TUBE: type no. 6CD6GA, Sylvania	Series regulator tube for main B+ supply. Figure 22
V104		ELECTRON TUBE: type no. 6CL6, RCA	Series regulator tube for aux. B+ supply. Figure 22
V105		ELECTRON TUBE: type no. 6AW8A, Sylvania	Loop amplifier tube for main B+ supply. Fig. 22
V106		ELECTRON TUBE: type no. 6203, GE	Rectifier for power supply plate voltages. Figure 22
V107		ELECTRON TUBE: type no. 6AU8, RCA	V107A - loop amplifier for aux B+ supply: V107B - shunt regulator for +150v short test supply. Figure 22
V108		ELECTRON TUBE: type no. 0A2, RCA	Voltage regulator used for -150v reference. Figure 22.

TABLE 7 - 1 PARTS LIST (Cont)

REF. DESIG.	NOTES	ITEM NAME AND DESCRIPTION	LOCATING FUNCTION
W101		CABLE ASSEMBLY, POWER, ELECTRICAL: Hickok part no. 3030-147	Power supply cable. Figure 2
W102		CABLE, POWER, ELECTRICAL: 3 stranded no. 18 tinned copper conductors, rubber conductor insulation, cotton filler - rubber cable jacket, conductor insulation color coded black-white and green, MIL-C-3432A type no. CO-03LGF-3-18-0240	Replacement cable for W101
W103 thru W400		not used	
W401		LEAD, ELECTRICAL: single stranded no. 18 tinned copper conductor, cotton wrap - black rubber insulation, one end terminated w/grid cap clip, black phenolic clip insulation, Amphenol-Borg part no. 63-1W.	Test lead for top connection to grid or plate. p/o Z401. Figure 2
X301		SOCKET ASSEMBLY, ELECTRON TUBE: one 7 pin in-line sub-miniature socket and one 8 pin sub-miniature socket on common mtg plate, silver plated copper base alloy contacts, Hickok part no. 19351-26	
X301A		part of X301 (for reference only)	Test socket for 8 pin sub-miniature tubes. Figure 2
X301B		part of X301 (for reference only)	Test socket for 7 pin in-line sub-miniature tubes. Figure 2
X302		SOCKET, ELECTRON TUBE: silver plated copper base alloy contacts, Cinch part no. 24222 modified.	Test socket for jumbo 9 pin type tubes. Figure 2
X303 thru X400		not used	
X401		SOCKET, ELECTRON TUBE: 4 contacts, molded plastic body, Amphenol-Borg part no. 78S4TM-051	Test socket for 4 pin type tubes. Figure 2

TABLE 7 - 1 PARTS LIST (Cont)

REF. DESIG.	NOTES	ITEM NAME AND DESCRIPTION	LOCATING FUNCTION
X402		SOCKET, ELECTRON TUBE: 5 contacts, molded plastic body, Amphenol-Borg part no. 78S5TM-051	Test socket for 5 pin type tubes. Figure 2
X403		SOCKET, ELECTRON TUBE: 6 contacts, molded plastic body, Amphenol-Borg part no. 78S6TM-051	Test socket for 6 pin type tubes. Figure 2
X404		SOCKET, ELECTRON TUBE: 7 contacts, molded plastic body, Amphenol-Borg part no. 78S7CDTM-051	Combination test socket for large and small dia. pin configuration 7 pin type tubes. Figure 2
X405		SOCKET, ELECTRON TUBE: 8 contacts "loktal" molded plastic body, Amphenol-Borg part no. 78S8LTM-051	Test socket for 8 pin loctal type tubes. Fig. 2
X406		SOCKET, ELECTRON TUBE: 8 contacts "octal", molded plastic body, Amphenol-Borg part no. 78S8TM-051	Test socket for 8 pin octal type tubes. Figure 2
X407		SOCKET, ELECTRON TUBE: 7 contacts, molded plastic body, Elco part no. 105BC	Test socket for 7 pin miniature type tubes. Figure 2
X408		SOCKET, ELECTRON TUBE: 9 contacts, molded plastic body, Elco part no. 271BC	Test socket for 9 pin noval type tubes. Figure 2
XC101		SOCKET, ELECTRON TUBE: 8 contact octal, phenolic body, MIL-S-12883A type no. TS101P02	Socket for capacitor C101. Figure 24
XC102		same as XC101	Socket for capacitor C102. Figure 24
XC103		same as XC101	Socket for capacitor C103. Figure 24
XC104		same as XC101	Socket for capacitor C104. Figure 24
XDS101 thru XDS105		not used	
XDS106		LIGHT, INDICATOR: plain convex red glass jewel, MIL-L-3661 type no. LH62BR2	Socket for DS106. Figure 2
XDS107		LIGHT, INDICATOR: plain convex green glass jewel, MIL-L-3661 type no. LH62BG2	Socket for DS107, Figure 2

TABLE 7-1 PARTS LIST (Cont)

REF. DESIG.	NOTES	ITEM NAME AND DESCRIPTION	LOCATING FUNCTION
XDS108		same as XDS106	Socket for DS108. Figure 2 and Figure 25
XF101		FUSEHOLDER: extractor post type, 250v - 15 amp, MIL-STD-242C type no. FD-1, Bussman part no. HKP-EJLQRW-ZZ	Socket for F101. Figure 2
XF102		same as XF101	Socket for F102 - Figure 2
XF103 thru XF200		not used	
XF201		same as XF101	Socket for F201. Figure 2
XF202		same as XF101	Socket for F202. Figure 2
XRT101		LAMPHOLDER: 600V - 6 amp, Hickok part no. 19351-27	Socket for RT101. Figure 23
XV101		same as XC101	Socket for V101. Figure 24
XV102		SOCKET, ELECTRON TUBE: 7 contacts, miniature, molded plastic body, MIL-S-12883A type no. TS102P01	Socket for V102. Figure 24
XV103		same as XC101	Socket for V103. Figure 24
XV104		SOCKET, ELECTRON TUBE: 9 contacts, noval, molded plastic body, MIL-S-12883A type no. TS103P01	Socket for V104. Figure 24
XV105		same as XV104	Socket for V105. Figure 24
XV106		same as XV104	Socket for V106. Figure 24
XV107		same as XV104	Socket for V107. Figure 24
XV108		same as XV102	Socket for V108. Figure 24
Z401		SUBASSEMBLY, TEST SOCKETS: plug in assembly consisting of: P401, W401, X401, X402, X403, X404, X405, X406, X407 and X408, Hickok part no. 16375-538	Test sockets for octal, loktal, noval, miniature 7 pin, and 4, 5, 6 and 7 pin standard base tubes. Figure 2

TABLE 7-2 LIST OF MANUFACTURERS

ABBREVIATION	NAME	ADDRESS
AB	Allen-Bradley Co.	224 W. Greenfield Ave., Milwaukee, Wisconsin
Allied Control	Allied Control Co., Inc.	2 East End Ave., New York 21, New York
Amphenol-Borg	Amphenol-Borg Electronics Corp.	1830 South 54th Ave., Chicago 50, Illinois
Bussman	Bussman Mfg. Div. of McGraw-Edison Co.	2538 W. University St., St. Louis 7, Missouri
Cinch	Cinch Mfg. Corp.	1026 S. Homan Ave., Chicago 24, Illinois
Duro	Duro Specialty Co., Inc.	811 Boston St., West Lynn, Massachusetts
Elco	Elco Corp.	"M" Street Below Erie Ave., Philadelphia 24, Pennsylvania
Electra	Electra Mfg. Co.	4051 Broadway, Kansas City 11, Missouri
Electrosnap	Electrosnap Corp.	4218 W. Lake St., Chicago 24, Illinois
Erie	Erie Resistor Corp.	644 W. 12th St., Erie, Pennsylvania
GE (Lamps)	General Electric Co., Lamp Div. of Consumer Products Group	1133 E. 152nd St., Cleveland 10, Ohio
GE (Tubes)	General Electric Co., Receiving Tube Dept.	316 E. Ninth Street Owensboro, Kentucky
Hickok	Hickok Electrical Instrument Company	10514 Dupont Ave., Cleveland 8, Ohio
Int. Rect.	International Rectifier Corp.	1521 E. Grand Ave., El Segundo, California
Lectrohm	Lectrohm, Inc.	5560 Northwest Highway, Chicago 30, Illinois

TABLE 7-2 LIST OF MANUFACTURERS (Cont)

ABBREVIATION	NAME	ADDRESS
Littelfuse	Littelfuse, Inc.	1865 Miner St., Des Plaines, Illinois
Micro Switch	Minneapolis-Honeywell Regulator Co., Micro Switch Div.	W. Spring St., Freeport, Illinois
Mieth	Mieth, M. C., Mfg. Co.	P. O. Box 832, Port Orange, Florida
RCA	Radio Corp. of America, Electron Tube Div.	415 S. 5th St., Harrison, New Jersey
Sylvania	Sylvania Electric Products, Inc. Tube Division	Emporium, Pennsylvania

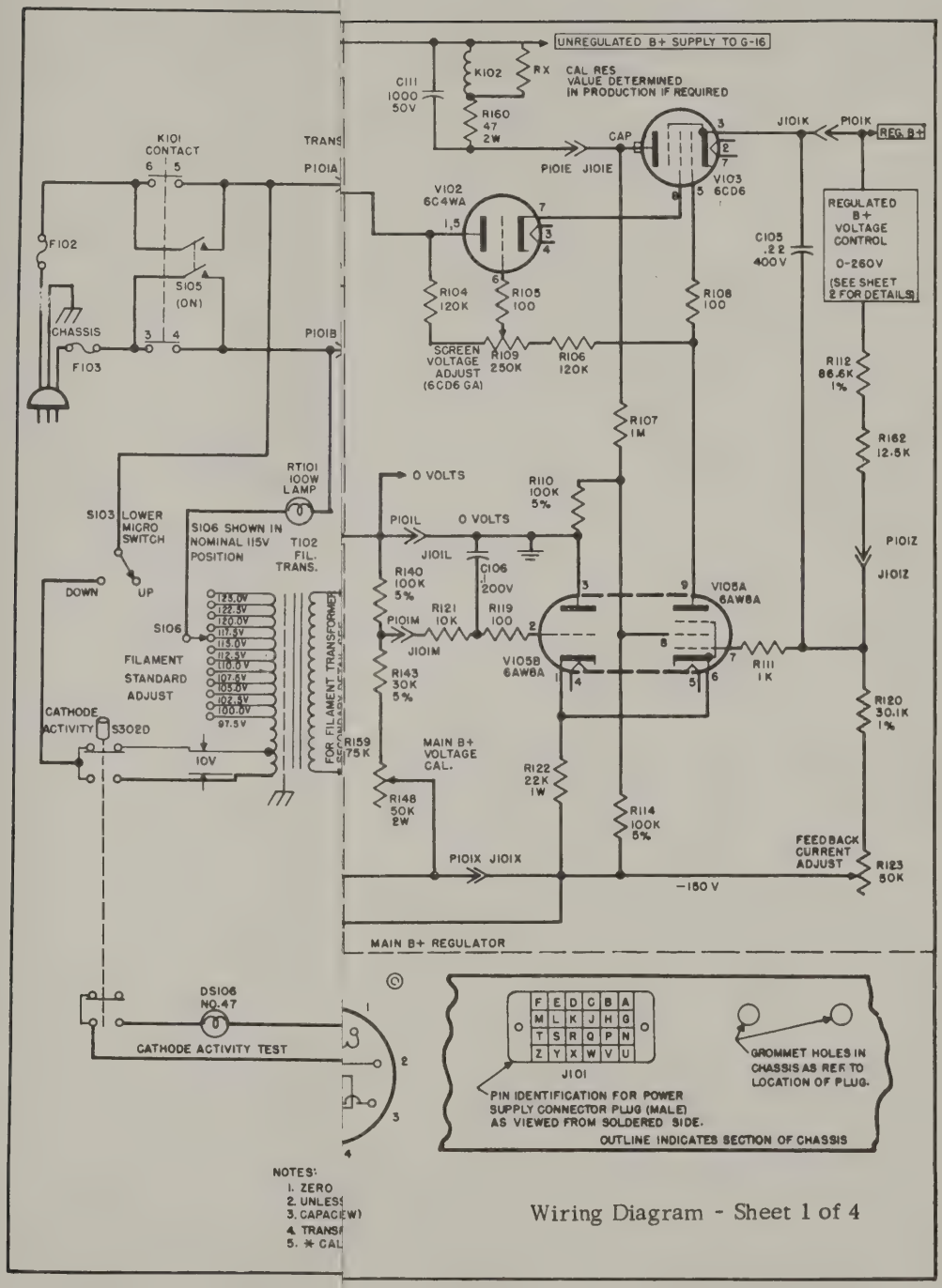

Wiring Diagram - Sheet 1 of 4

TABLE 7-2 LIST OF MANUFACTURERS (Cont)

ABBREVIATION	NAME	ADDRESS
Littelfuse	Littelfuse, Inc.	1865 Miner St., Des Plaines, Illinois
Micro Switch	Minneapolis-Honeywell Regulator Co., Micro Switch Div.	W. Spring St., Freeport, Illinois
Mieth	Mieth, M. C., Mfg. Co.	P. O. Box 832, Port Orange, Florida
RCA	Radio Corp. of America, Electron Tube Div.	415 S. 5th St., Harrison, New Jersey
Sylvania	Sylvania Electric Products, Inc. Tube Division	Emporium, Pennsylvania

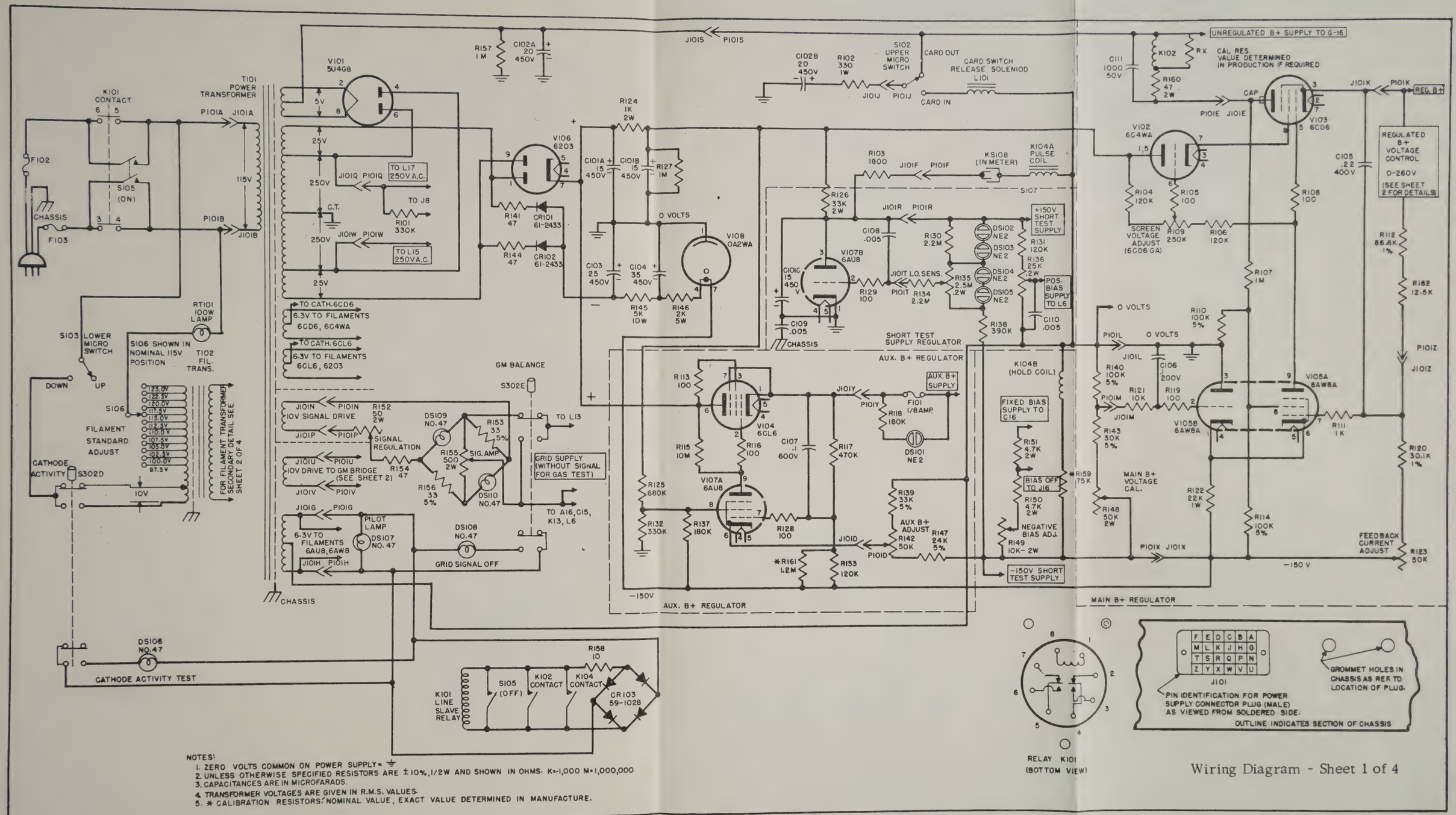

NOTES:
1. ZERO VOLTS COMMON ON POWER SUPPLY = ⏚
2. UNLESS OTHERWISE SPECIFIED RESISTORS ARE ±10%, 1/2W AND SHOWN IN OHMS. K=1,000 M=1,000,000
3. CAPACITANCES ARE IN MICROFARADS.
4. TRANSFORMER VOLTAGES ARE GIVEN IN R.M.S. VALUES.
5. * CALIBRATION RESISTORS: NOMINAL VALUE, EXACT VALUE DETERMINED IN MANUFACTURE.

Wiring Diagram - Sheet 1 of 4

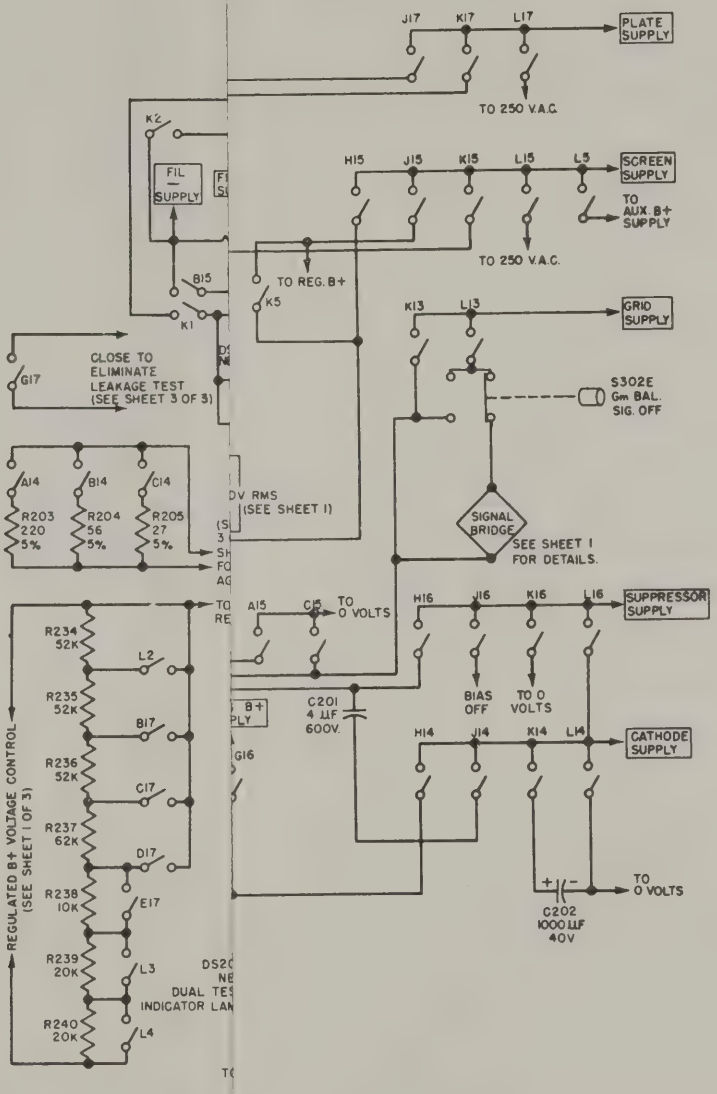

Wiring Diagram - Sheet 2 of 4

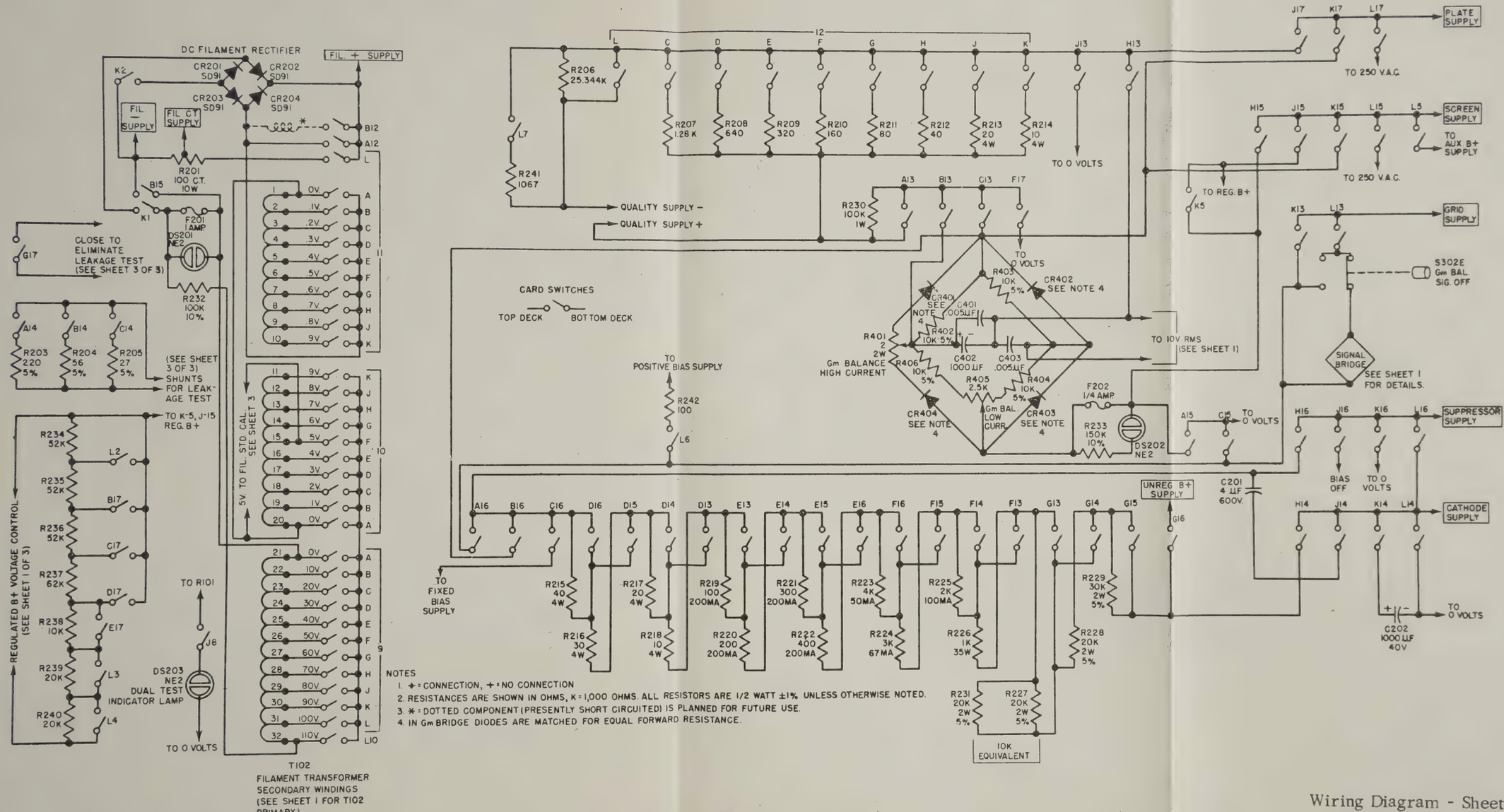

NOTES

1. + = CONNECTION, + = NO CONNECTION
2. RESISTANCES ARE SHOWN IN OHMS, K = 1,000 OHMS. ALL RESISTORS ARE 1/2 WATT ±1% UNLESS OTHERWISE NOTED.
3. * = DOTTED COMPONENT (PRESENTLY SHORT CIRCUITED) IS PLANNED FOR FUTURE USE.
4. IN Gm BRIDGE DIODES ARE MATCHED FOR EQUAL FORWARD RESISTANCE.

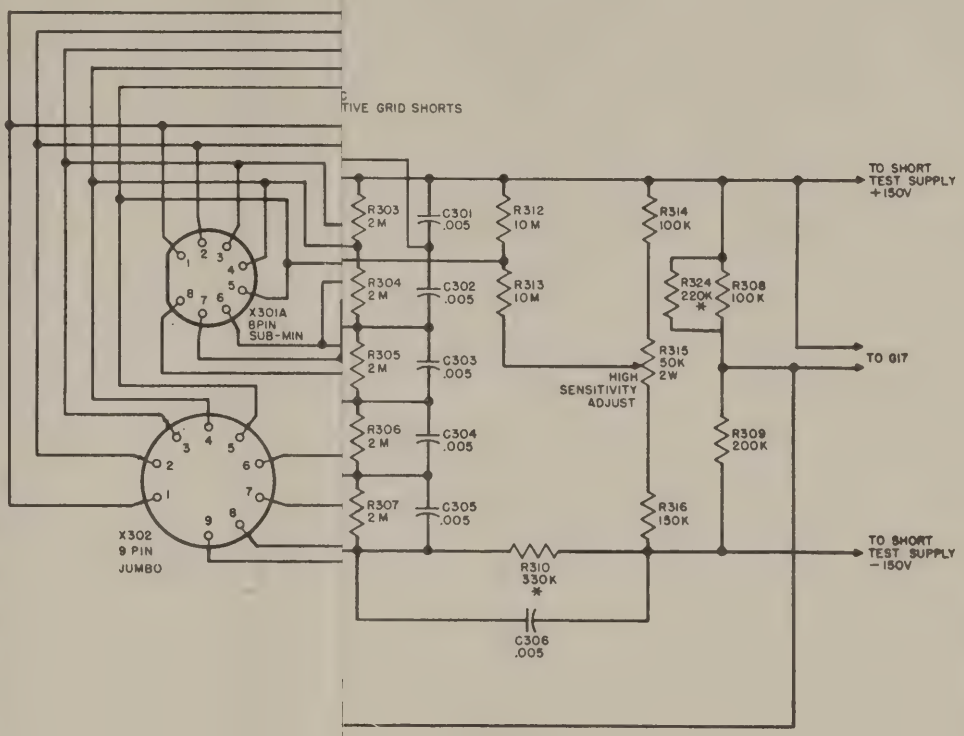

(M) = 1,000,000 OHMS.
TED.
WISE NOTED.
E SHOWN IN UP POSITION.
EPRESSED.
S DEPRESSED.
TERMINED IN MANUFACTURE.

TR

Wiring Diagram - Sheet 3 of 4

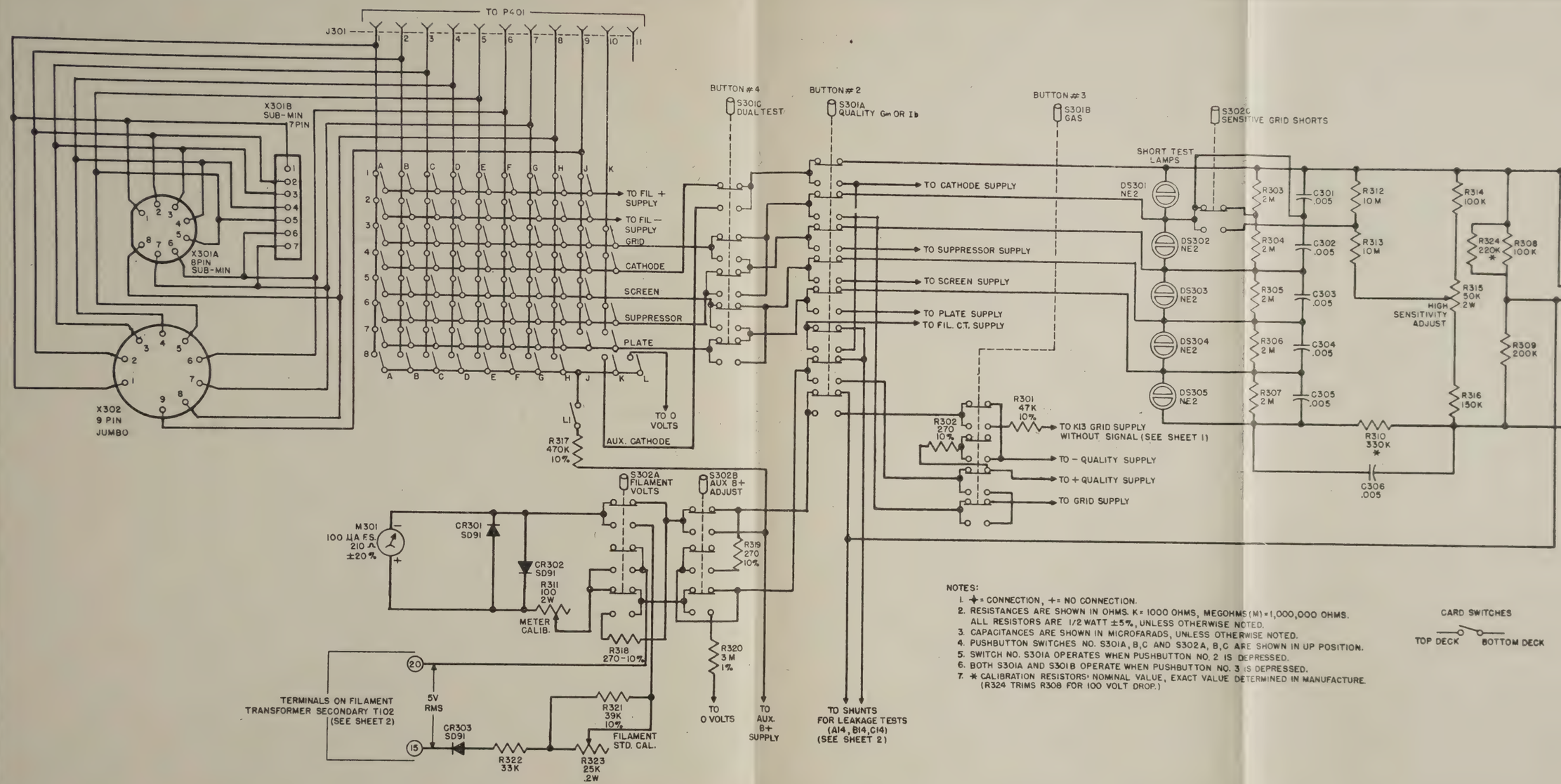

NOTES:

1. ✦ = CONNECTION, + = NO CONNECTION.
2. RESISTANCES ARE SHOWN IN OHMS. K = 1000 OHMS, MEGOHMS (M) = 1,000,000 OHMS. ALL RESISTORS ARE 1/2 WATT ±5%, UNLESS OTHERWISE NOTED.
3. CAPACITANCES ARE SHOWN IN MICROFARADS, UNLESS OTHERWISE NOTED.
4. PUSHBUTTON SWITCHES NO. S301A, B, C AND S302A, B, C ARE SHOWN IN UP POSITION.
5. SWITCH NO. S301A OPERATES WHEN PUSHBUTTON NO. 2 IS DEPRESSED.
6. BOTH S301A AND S301B OPERATE WHEN PUSHBUTTON NO. 3 IS DEPRESSED.
7. * CALIBRATION RESISTORS' NOMINAL VALUE, EXACT VALUE DETERMINED IN MANUFACTURE. (R324 TRIMS R308 FOR 100 VOLT DROP.)

CARD SWITCHES

TOP DECK — BOTTOM DECK

Wiring Diagram - Sheet 3 of 4

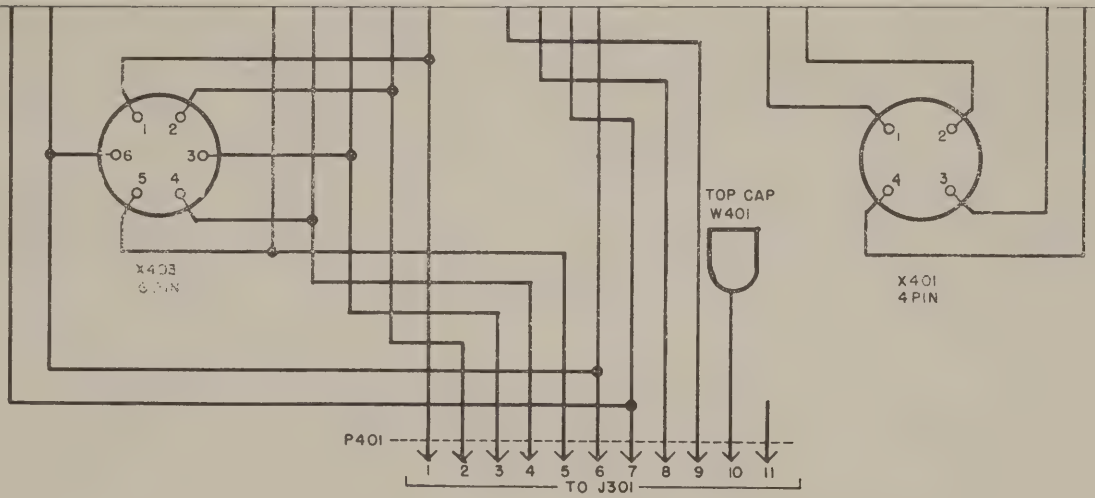

Wiring Diagram - Sheet 4 of 4

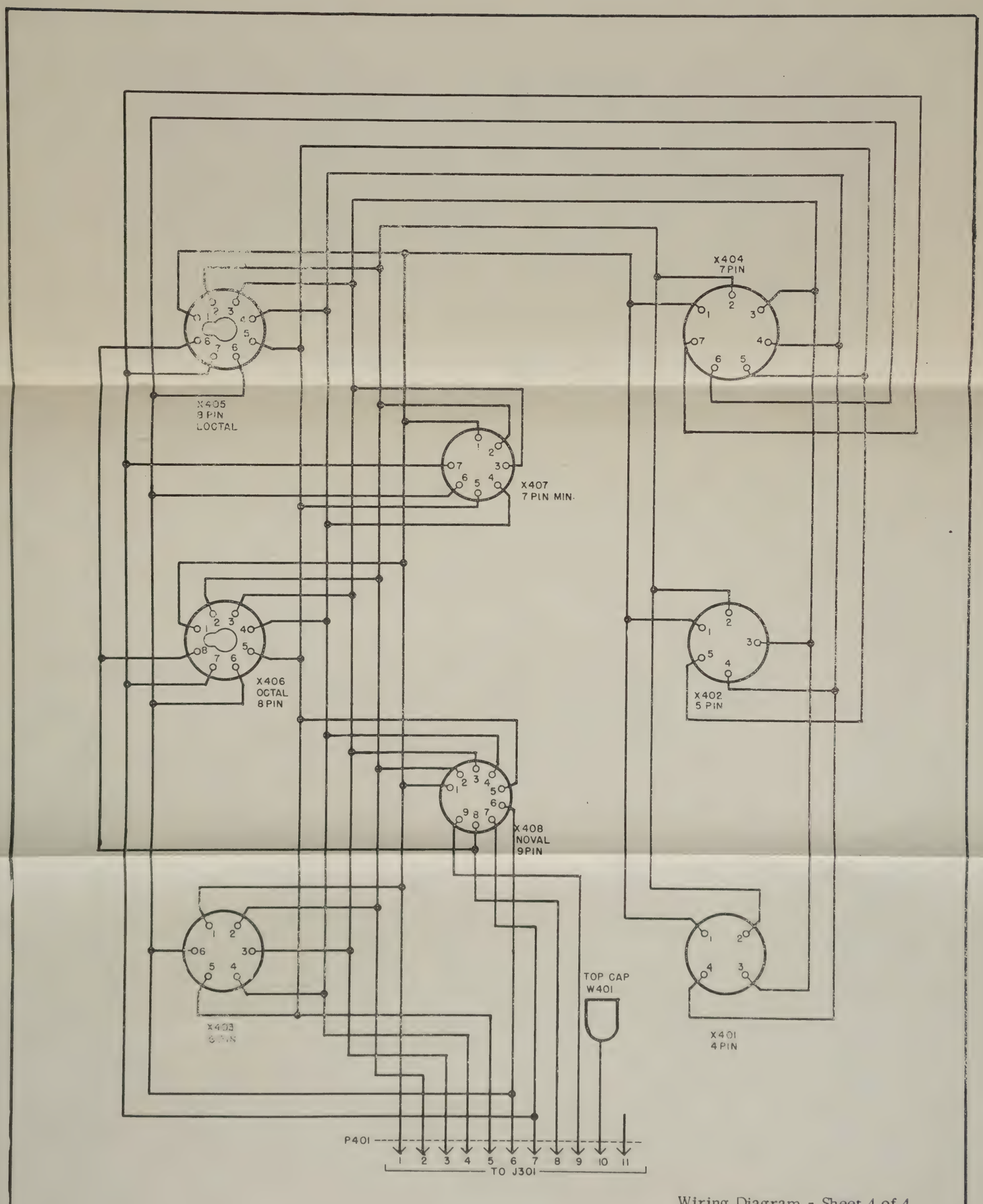

Wiring Diagram - Sheet 4 of 4

7. PARTS LIST

7.1 Introduction

Reference designations have been assigned to identify all maintenance parts of the equipment. They are used for marking the equipment (adjacent to the part they identify when practical) and are included on drawings, diagrams and the parts list. The letters of a reference designation indicate the kind of part (generic group), such as resistor, capacitor, electron tube, etc. The number differentiates between parts of the same group. Parts associated directly with the complete equipment are numbered from 1 to 99. Parts associated with the power supply circuit are numbered from 100 to 199; parts associated with automatic circuit selection from 200 to 299; parts associated with automatic tube pin selection from 300 to 399; and those associated with the test socket sub assembly from 400 to 499. Sockets associated with a particular plug-in device such as an electron tube, fuse or lamp are identified by a reference designation which includes the reference designation of the plug-in device. For example, the socket for electron tube V101 is designated XV101 and the socket for plug-in capacitor C101 is XC101.

7.2 Maintenance Parts List

Table 7-1 lists all maintenance parts for the equipment. Column 1 lists the reference designations in alpha numeric sequence. Column 2 refers to explanatory notes that may appear in paragraph 7.5 below. Column 3 gives the name and a brief description of all key parts (parts differing from any part previously listed in the table). The name and description are omitted for other parts and the notation "Same as (followed by the reference designation of the corresponding key part)" is substituted.

Column 4 indicates how the part is used and gives its functional location in the equipment. It also includes the pictorial illustration, if any, on which the part is identified.

7.3 Stock Number Identification

Stock numbers of parts used in this equipment can be obtained by referring to the Stock Number Identification Table (SNIT) published by E. S. O.

7.4 List of Manufacturers.

Table 7-2 lists manufacturers of parts used in the equipment. The first column indicates the abbreviations used in Table 7-1 to identify manufacturers.

7.5 Notes

The following provides additional information about items listed in Table 7-1.

a. Neon Glow Lamps DS302 through DS305, are selected for uniform striking voltage and should be replaced as a set.

b. Diodes CR401 through CR404 are supplied as a matched set. Do not attempt to replace individual units.

c. MIL type descriptions may be found in NAVSHIPS 900, 000. 104.

REF. DESIG.	NOTES	NAME AND DESCRIPTION	FIG. NO.
A1		SUBASSEMBLY, TEST SOCKETS: plug-in assembly consisting of: P401, W401, X401, X402, X403, X404, X405, X406, X407, and X408 (28569 part no. 16375-538)	2
C101		CAPACITOR: MIL-type CE53C150R	22
C101A		Part of C101	22
C101B		Part of C101	22
C101C		Part of C101	22
C102		CAPACITOR: MIL type CE52C200R	22
C102A		Part of C102	22
C102B		Part of C102	22
C103		CAPACITOR: MIL type CE51C250R	22
C104		CAPACITOR: MIL type CE51C350R	22
C105		CAPACITOR: MIL type CP05A1KF224K3	25
C106		CAPACITOR: MIL type CP05A1KC104K3	25
C107		CAPACITOR: MIL type CP05A1KF104K3	25
C108		CAPACITOR: MIL type CK62AW472M	25
C109		Same as C108	25
C110		Same as C108	27
C111		CAPACITOR: MIL type CE51C102F	23
C112		CAPACITOR: MIL type CE11C151E	26
C113		CAPACITOR: MIL type CS13AE100K	26
C114		CAPACITOR: MIL type CL23CH100TN3	26
C115		Same as C113	26
C116		Same as C106	26
C117		Same as C106	26
C118 thru C200		Not used	
C201		CAPACITOR: MIL type CP70B1EF405K1	23
C202		CAPACITOR: MIL type CE51C801G	23
C203 Thru C300		Not used	
C301		Same as C108	30
C302		Same as C108	30
C303		Same as C108	30
C304		Same as C108	30
C305		Same as C108	30
C306		Same as C108	30
C307 thru C400		Not used	
C401		CAPACITOR: MIL type CK63BX332K	26
C402		CAPACITOR: MIL type CEC102D	26
C403		Same as C401	26
CR101		SEMI-CONDUCTOR DEVICE, DIODE: 1N4249 (Mfg. by Semtech)	25
CR102		Same as CR101	25
CR103		DIODE: MIL type JAN1N538	26
CR104		Same as CR103	26
CR105		Same as CR103	26
CR106		Same as CR103	26
CR107		Same as CR103	26
CR108		Not used	
CR109		DIODE: MIL type 1N483B	26
CR110		DIODE: MIL type JAN1N276	26
CR111		Same as CR110	26
CR112		Same as CR110	26
CR113		Same as CR110	26
CR114		Same as CR109	26
CR115		DIODE: MIL type 1N753	26

REF. DESIG.	NOTES	NAME AND DESCRIPTION	FIG. NO.
CR116 thru CR200		Not used	
CR201		Same as CR103	26
CR202		Same as CR103	26
CR203		Same as CR103	26
CR204		Same as CR103	26
CR205 thru CR300		Not used	
CR301		Same as CR103	23
CR302		Same as CR103	23
CR303		Same as CR103	28
CR304 thru CR400		Not used	
CR401, CR402, CR403, & CR404		DIODE: matched set of four type JAN1N540M diodes. (28569 part no. 3870-123)	26
DS101		LAMP, GLOW: neon gas type, 1/17 watt, 65 v ac, 90 v dc initial striking voltage, 0.5 ma current rating, (06247 part no. NE-2)	2
DS102 thru DS105		Not used	
DS106		LAMP: MIL type MS15571-2	2
DS107		Same as DS106	2
DS108		Same as DS106	2 & 23
DS109		LAMP, INCANDESCENT: 6 to 8 volt, 0.15 amp, MS15571-2 aged. (28569 part no. 12270-57)	27
DS110		Same as DS109	27
DS111 thru DS200		Not used	
DS201		Same as DS101	2
DS202		Same as DS101	2
DS203		Same as DS101	23
DS204 thru DS300		Not used	
DS301	A	LAMP SET, GLOW: neon gas type, 1/25 watt, each lamp selected to be within 2 volt striking voltage of each other. Consists of DS301, DS302, DS303, DS304, and DS305. (28569 part no. 12270-2)	2
DS302		Part of DS301	2
DS303		Part of DS301	2
DS304		Part of DS301	2
DS305		Part of DS301	2
E1		CALIBRATION CELL: Octal tube base w/integrally mtd selected resistors and mercury cell capped w/permanent metal cap, plugs into front panel mtd. octal socket. (28569 part no. 3047-3)	4
EV101		Not used	
EV102		SHIELD, ELECTRON TUBE: Accommodates EIA tube envelope style T-5-1/2, heat dissipating type shield (71785 part no. 150-15-20-137)	Tube shield for V102- Fig. 22
EV103		Not used	
EV104		SHIELD, ELECTRON TUBE: Accommodates EIA tube envelope style T-6-1/2, heat dissipating type shield. (71785 part no. 151-15-30-098)	Tube shield for V104- Fig. 22

REF. DESIG.	NOTES	NAME AND DESCRIPTION	FIG. NO.
EV105		Same as EV104	Tube shield for V105 - Fig. 22
EV106		Same as EV104	Tube shield for V106 - Fig. 22
EV107		Same as EV104	Tube shield for V107 - Fig. 22
EV108		SHIELD, ELECTRON TUBE: accommodates EIA tube envelope style T-5-1/2, heat dissipating type shield. (71785 part no. 150-15-30-138)	Tube shield for V108 - Fig. 22
F101		FUSE: MIL type F02B250V1/8AS	2
F102		FUSE: MIL type F02A250V4AS per MIL-F-15160D	2
F103		Same as F102	2
F104 thru F200		Not used	
F201		FUSE: MIL type F02B250V1AS	2
F202		FUSE: MIL type F02A250V1/4AS	2
J101		CONNECTOR, RECEPTACLE, ELECTRICAL: 24 contacts, low loss plastic dielectric. (91662 part no. RM22450-5) gold over silver pl. contacts	24
J102 thru J300		Not used	
J301		CONNECTOR, RECEPTACLE, ELECTRICAL: 11 contacts, low loss plastic dielectric. (02660 part no. 77M1P11TM)	Plug for replaceable tube socket plate Assy A1-Fig. 2
K101		RELAY, ARMATURE: contact arrangement 2A Ref Dwg Group 4, 5 amp resistive current rating at 115v ac max. (70309 part no. TFHX-23)	23
K102		RELAY, MAGNETIC: reed type relay, contact arrangement 1A - Ref Dwg. Group 4, 200 ma operating sensitivity. (28569 part no. 18400-17)	26
L101		SOLENOID: DC, S101 Activating solenoid (28569 part no. 19360-6)	Part of S101 Fig. 2
M301		METER, ELECTRON TUBE TESTER: (28569 part no. 482-066)	2
MP1		KNOB: push-on type, black phenolic body. (28569 part no. 2920-7)	Knob for S302A Fig. 3
MP2		Same as MP1	Knob for S302B Fig. 3
MP3		Same as MP1	Knob for S302C Fig. 3
MP4		KNOB: push-on type, red phenolic body. (28569 part no. 2920-8)	Knob for S302D Fig. 3
MP5		Same as MP4	Knob for S302E Fig. 3
MP6		KNOB: push-on type, black phenolic body, stamped with numeral 2. (28569 part no. 2920-11)	2
MP7		KNOB: push-on type, black phenolic body, stamped with numeral 3. (28569 part no. 2920-12)	2
MP8		KNOB: push-on type, red phenolic body, stamped with numeral 4. (28569 part no. 2920-15)	2

REF. DESIG.	NOTES	NAME AND DESCRIPTION	FIG. NO.
MP9		KNOB: MIL type MS91528-1C2B	Knob for S106. Fig. 3
MP10		Same as MP9	Knob for R142. Fig. 3
MP11		Same as MP9	Knob for R401 Fig. 3
MP12		Same as MP9	Knob for R405 Fig. 3
MP13		PIN STRAIGHTENER ASSEMBLY, ELECTRON TUBE: Combination 7 pin miniature and 9 pin noval on common mtg. base. (88065 part no. D-279-S)	2
MP14		Not used	
MP15		PUNCH, PAPER, HAND: Steel nickle-plated finish, for 3/16 in dia holes. (Mieth Mfg. Co. part no. 464)	1
N1		CARD, NON TEST: Card-switch shipping card, Mylar material. (28569 part no. 3122-171)	
N2		Not used	
N3		CARD SET, TUBE TEST: Prepunched test card set per MIL-T-23125 (SHIPS) Appendix I. Mylar material (28569 part no. 3122-142)	
N4		CARD SET, BLANK, TUBE TEST: PROGRAMMING: Unpunched test card set per MIL-T-23125 (SHIPS) Mylar material. (28569 part no. 3122-170)	
N5		CARD SET, CALIBRATION AND MAINTENANCE: Prepunched Mylar card set per MIL-T-23125 (SHIPS). (28569 part no. 3122-172)	
P101		CONNECTOR, PLUG, ELECTRICAL: 24 contacts, 1 connector mating end, low loss plastic dielectric. (91662 part no. RF22451X) gold over silver pl. contacts	23
P102		CONNECTOR: MIL type N-UP121M	1
P103 thru P400		Not used	
P401		CONNECTOR, PLUG, ELECTRICAL: Octal type plug, mica filled phenolic body (71785 part no. 13798)	Part of A1 Fig. 2
Q1		TRANSISTOR: MIL type USN2N1711	26
Q2		TRANSISTOR: (04713 part no. 2N2219)	26
R101		RESISTOR: MIL type RC20GF334K	29
R102		RESISTOR: MIL type RC32GF331K	25
R103		RESISTOR: MIL type RC42GF151K	26
R104		RESISTOR: MIL type RL20AD124J	25
R105		RESISTOR: MIL type RC20GF101K	25
R106		Same as R104	25
R107		RESISTOR: MIL type RC20GF105K	25
R108		Same as R105	25
R109		RESISTOR: MIL type RV4LAYSA254A	22 & 24
R110		RESISTOR: MIL type RL20AD104J	25
R111		RESISTOR: MIL type RC20GF102K	25
R112		RESISTOR: MIL type RN70C1003F	26
R113		Same as R105	25
R114		Same as R110	25
R115		RESISTOR: MIL type RC20GF106K	25
R116		Same as R105	25
R117		RESISTOR: MIL type RC20GF474K	25
R118		RESISTOR: MIL type RL20AD184J	Mounted on KF101. Fig. 2
R119		Same as R105	25
R120		RESISTOR: MIL type RN70C3012F	25
R121		RESISTOR: MIL type RC20GF103K	25
R122		RESISTOR: MIL type RL32AD243J	25
R123		RESISTOR: MIL type RV4LAYSA503A	22 & 24

REF. DESIG.	NOTES	NAME AND DESCRIPTION	FIG. NO.
R124		RESISTOR: MIL type RC42GF102K	25
R125		RESISTOR: MIL type RC20GF684K	25
R126		RESISTOR: MIL type RC42GF333K	25
R127		Same as R107	25
R128		Same as R105	25
R129		Same as R105	25
R130		RESISTOR: MIL type RC20GF225K	27
R131		Same as R104	27
R132		Same as R101	25
R133		Same as R104	25
R134		Same as R130	27
R135		RESISTOR: MIL type RV6LAYSA255A	3
R136		RESISTOR: MIL type RV6LAYSA253A	3
R137		Same as R118	25
R138		RESISTOR: MIL type RL20AD394J	27
R139		RESISTOR: MIL type RL20AD333J	27
R140		Same as R110	28
R141		RESISTOR: MIL type RC20GF470K	25
R142		RESISTOR: MIL type RV4NAYSD503A	3
R143		RESISTOR: MIL type RL20AD303J	28
R144		Same as R141	25
R145		RESISTOR: MIL type RW31G512	24
R146		RESISTOR: MIL type RW30G202	24
R147		RESISTOR: MIL type RL20AD243J	27
R148		Same as R123	3
R149		RESISTOR: MIL type RA20LASB103A	3
R150		RESISTOR: MIL type RC42GF472K	28
R151		Same as R150	28
R152		RESISTOR: MIL type RA20LASB500A	3
R153		RESISTOR: MIL type RC20GF330J	27
R154		Same as R141	27
R155		RESISTOR: MIL type RA20LASB501A	3
R156		Same as R153	27
R157		Same as R107	25
R158		RESISTOR: MIL type RL20AD102J	26
R159		RESISTOR: MIL type RC20GF104K	26
R160		RESISTOR: MIL type RC42GF101K	23
R161		RESISTOR: MIL type RC20GF125K	25
R162		RESISTOR: MIL type RC32GF682K	26
R163		RESISTOR: MIL type RL20AD822J	26
R164		RESISTOR: MIL type RV6LAYSA503A	22
R165		Same as R158	26
R166		Not used	
R167		RESISTOR: MIL type RC20GF7R5J	26
R168		RESISTOR: MIL type RL20AD101J	26
R169		RESISTOR: MIL type RL20AD103J	26
R170		Same as R158	26
R171		RESISTOR: MIL type RV6LAYSA103A	22
R172 thru R200		Not used	
R201		RESISTOR, FIXED, WIRE WOUND: 100 ohms, ±20%, 10W, center tapped. (28569 part no. 18575-264)	26
R202		Not used	
R203		RESISTOR: MIL type RL20AD221J	26
R204		RESISTOR: MIL type RL20AD560J	26
R205		RESISTOR: MIL type RC20GF270J	26
R206		RESISTOR, FIXED, FILM: 25, 340 ohms, ±1%, 1/2 W, MIL-R-10509D type no. RN70C except for resistance value	26
R207		RESISTOR, FIXED, FILM: 1280 ohms, ±1%, 1/2W, MIL-R-10509D type no. RN70B except for resistance value	26

REF. DESIG.	NOTES	NAME AND DESCRIPTION	FIG. NO.
R208		RESISTOR, FIXED, FILM: 640 ohms, ±1%, 1/2 W, MIL-R-10509D type no. RN70B except for resistance value	26
R209		RESISTOR, FIXED, FILM: 320 ohms, ±1%, 1/2W, MIL-R-10509D type no. RN70B except for resistance value	26
R210		RESISTOR, FIXED, FILM: 160 ohms, ±1%, 1/2 W, MIL-R-10509D type no. RN70B except for resistance value	26
R211		RESISTOR, FIXED, FILM: 80 ohms, ±1%, 1/2W, MIL-R-10509D type no. RN70B except for resistance value	26
R212		RESISTOR, FIXED, FILM: 40 ohms, ±1%, 1/2W, MIL-R-10509D type no. RN70B except for resistance value	26
R213		RESISTOR, FIXED, WIRE WOUND: 20 ohms, ±1%, 4W, (28569 part no. 18575-261)	26
R214		RESISTOR, FIXED, WIRE WOUND: 10 ohms, ±1%, 4W, (28569 part no. 18575-260)	26
R215		RESISTOR, FIXED, WIRE WOUND: 40 ohms, ±1%, 4W, (28569 part no. 18575-263)	26
R216		RESISTOR, FIXED, WIRE WOUND: 30 ohms, ±1%, 4W, (28569 part no. 18575-262)	26
R217		Same as R213	26
R218		Same as R214	26
R219		RESISTOR, FIXED, WIRE WOUND: 100 ohms, ±1%, 10W, (28569 part no. 18575-265)	26
R220		RESISTOR, FIXED, WIRE WOUND: 200 ohms, ±1%, 10W, (28569 part no. 18575-266)	26
R221		RESISTOR, FIXED, WIRE WOUND: 300 ohms, ±1%, 20W, (28569 part no. 18575-267)	26
R222		RESISTOR, FIXED, WIRE WOUND: 400 ohms, ±1%, 35W, (28569 part no. 18575-268)	26
R223		RESISTOR, FIXED, WIRE WOUND: 4000 ohms, ±1%, 10W, (28569 part no. 18575-271)	26
R224		RESISTOR, FIXED, WIRE WOUND: 3000 ohms, ±1%, 35W, (28569 part no. 18575-270)	26
R225		RESISTOR, FIXED, WIRE WOUND: 2000 ohms, ±1%, 50W, (28569 part no. 18575-269)	26
R226		RESISTOR, FIXED, WIRE WOUND: 1000 ohms, ±1%, 35W, (28569 part no. 18575-259)	26
R227		RESISTOR: MIL type RL42AD203J	26
R228		Same as R227	26
R229		RESISTOR: MIL type RL42AD303J	26
R230		RESISTOR: MIL type RN75B1003F	26
R231		Same as R227	26
R232		Same as R159	23
R233		RESISTOR: MIL type RC20GF154K	Mounted on XF202. Fig. 2
R234		RESISTOR, FIXED, FILM: 52,000 ohms, ±1%, 1/2W, MIL-R-10509D type no. RN70B except for resistance value	26
R235		Same as R234	26
R236		Same as R234	26
R237		RESISTOR: MIL type RN70B6192F	26
R238		RESISTOR: MIL type RN70B1002F	26
R239		RESISTOR: MIL type RN70B2002F	26
R240		Same as R239	26
R241		RESISTOR: MIL type RN70B1071F	26
R242		Same as R105	27
R243 thru R300		Not used	
R301		RESISTOR: MIL type RC20GF473K	29
R302		RESISTOR: MIL type RL20AD271J	29
R303		RESISTOR: MIL type RC20GF205J	30
R304		Same as R303	30

REF. DESIG.	NOTES	NAME AND DESCRIPTION	FIG. NO.
R305		Same as R303	30
R306		Same as R303	30
R307		Same as R303	30
R308		Same as R110	30
R309		RESISTOR: MIL type RL20AD204J	30
R310		Same as R125	30
R311		RESISTOR: MIL type RA20LASB101A	3
R312		Same as R115	28
R313		Same as R115	28
R314		Same as R110	30
R315		Same as R164	3
R316		RESISTOR: MIL type RL20AD154J	30
R317		Same as R117	26
R318		Same as R302	28
R319		Same as R302	28
R320		RESISTOR, FIXED, FILM: 3 megohm, ±1%, 1W, MIL-R-10509D type no. RN75B except for resistance value	28
R321		RESISTOR: MIL type RL20AD393J	28
R322		Same as R139	28
R323		Same as R136	3
R324		RESISTOR: MIL type RC20GF224J	30
R325 thru R400		Not used	
R401		RESISTOR: MIL type RA20NASD3R0A	3
R402		Same as R169	26
R403		Same as R169	26
R404		Same as R169	26
R405		RESISTOR: MIL type RV4NAYSD252A	3
R406		Same as R169	26
RT101		RESISTOR, THERMAL: 5000 ohms, ±20% @ 37.8°C, (10646 part no. A0610P1)	26
RT102		LAMP, INCANDESCENT: 120V, 100W, (06247 part no. 100A/RS)	23
S101		SWITCH ASSEMBLY, CARD: (28569 part no. 906-043)	2
S102		SWITCH: push button type (upper). Electro Snap Co. Series E4-109	18
S103		SWITCH: push button type (lower) Micro V3-19	
S104		Not used	
S105		SWITCH: MIL type MS25068-27	2
S106		SWITCH, ROTARY: single section type. (28569 part no. 19912-441)	3
S107 thru S300		Not used	
S301		SWITCH, PUSH: four section ganged type, three plunger type actuators. (28569 part no. 19910-152)	23
S302		SWITCH, PUSH: five section ganged type, five plunger type actuators. (28569 part no. 19910-153)	3 & 23
T101		TRANSFORMER, POWER, STEP-DOWN AND STEP-UP: 115V, 50 to 400 cps single phase primary, secondary windings: 550V center tapped w/taps at 25V and 525V. 200ma overall current rating, 10V at 300 ma, 10V at 150ma, 6V center tapped at 1.2 amp, 6V center tapped at 3 amp, 5V center tapped at 3 amp. (28569 part no. 20800-312)	23
T102		TRANSFORMER, POWER, STEP-DOWN: 125V, 50 to 400 cps single phase primary, secondary windings: 110V tapped at 10V, 20V, 30V, 40V, 50V, 60V, 70V, 80V, 90V, and 100V. 9V tapped at 1V, 2V, 3V, 4V, 5V, 6V, 7V, and 8V. 0.9V tapped at 0.1V, 0.2V, 0.3V, 0.4V, 0.5V, 0.6V, 0.7V, and 0.8V (28569 part no. 20800-247)	23
V101		ELECTRON TUBE: MIL type USN5U4GB	22
V102		ELECTRON TUBE: MIL type JAN6C4WA	22
V103		ELECTRON TUBE: (82219 part no. 6CD6GA)	22

REF. DESIG.	NOTES	NAME AND DESCRIPTION	FIG. NO.
V104		ELECTRON TUBE: MIL type JAN6CL6	22
V105		ELECTRON TUBE: (82219 part no. 6AW8A)	22
V106		ELECTRON TUBE: MIL type JAN6203	22
V107		ELECTRON TUBE: (86684 part no. 6AU8)	22
V108		ELECTRON TUBE: MIL type JAN0A2WA	22
V109		LAMP, GLOW: neon NE-76, 68 to 76v dc initial breakdown voltage, 50 to 60v dc initial maintaining voltage @ 0.4ma dc current rating	27
V110		Same as V109	27
V111		Same as V109	27
V112		Same as V109	27
W101		CABLE ASSEMBLY, POWER, ELECTRICAL: (28569 part no. 3030-182)	Part of A1-Fig. 2
W102		CABLE: MIL type CO-03MGE(3/18)-0336	1
W103 thru W400		Not used	
W401		LEAD, ELECTRICAL: single stranded no. 18 tinned copper conductor, cotton wrap - black rubber insulation, one end terminated w/grid cap clip, black phenolic clip insulation. (02660 part no. 63-1W)	2
X301		SOCKET ASSEMBLY, ELECTRON TUBE: one 7 pin in-line sub-miniature socket and one 8 pin sub-miniature socket on common mtg plate, silver plated copper base alloy contacts. (28569 part no. 19351-26)	2
X302		SOCKET, ELECTRON TUBE: silver plated copper base alloy contacts, 9 pin. (71785 part no. 24222)	2
X303 thru X400		Not used	
X401		SOCKET, ELECTRON TUBE: 4 contacts, molded plastic	Part of A1 Fig. 2
X402		SOCKET, ELECTRON TUBE: 5 contacts, molded plastic body. (02660 part no. 78S5TM-051)	Part of A1 Fig. 2
X403		SOCKET, ELECTRON TUBE: 6 contacts, molded plastic body. (02660 part no. 78S6TM-051)	Part of A1 Fig. 2
X404		SOCKET, ELECTRON TUBE: 7 contacts, molded plastic body. (02660 part no. 78S7CDTM-051)	Part of A1 Fig. 2
X405		SOCKET, ELECTRON TUBE: 8 contacts, "loktal" molded plastic body. (02660 part no. 78S8LTM-051)	Part of A1 Fig. 2
X406		SOCKET, ELECTRON TUBE: 8 contacts, "octal", molded plastic body. (02660 part no. 78S8TM-051)	Part of A1 Fig. 2
X407		SOCKET: MIL type TS102P03	Part of A1 Fig. 2
X408		SOCKET: MIL type TS103P03	Part of A1 Fig. 2
XC101		SOCKET: MIL type TS101P02	24
XC102		Same as XC101	24
XC103		Same as XC101	24
XC104		Same as XC101	24
XC105 thru XC110		Not used	
XC111		Same as XC101	Socket for C111. Fig. 23
XC112 thru XC201		Not used	
XC202		Same as XC101	Socket for C202. Fig. 23

REF. DESIG.	NOTES	NAME AND DESCRIPTION	FIG. NO.
XDS101 thru XDS105		Not used	
XDS106		LIGHT: MIL type LH75LC14RD	Lens for DS106. Fig. 2
XDS107		LIGHT: MIL type LH75LC14GD	Lens for DS107. Fig. 2
XDS108		Same as XDS106	Lens for DS108. Fig. 2
XF101		FUSEHOLDER: MIL type FD-1	Fuseholder for F101 Fig. 2
XF102		Same as XF101	Fuseholder for F102 Fig. 2
XF103		Same as XF101	Fuseholder for F103 Fig. 2
XF104 thru XF200		Not used	
XF201		Same as XF101	Fuseholder for F201 Fig. 2
XF202		Same as XF101	Fuseholder for F202 Fig. 2
XRT102		LAMPHOLDER: 600V - 6 amp. (28569 part no. 19351-27)	
XV101		Same as XC101	
XV102		Same as X407	24
XV103		Same as XC101	24
XV104		Same as X408	24
XV105		Same as X408	24
XV106		Same as X408	24
XV107		Same as X408	24
XV108		Same as X407	24

Table 7-2. List of Manufacturers

MFR. CODE	NAME	ADDRESS
02660	Amphenol-Borg Electronics Corp.	Chicago, Illinois
04713	Motorola, Inc., Semi-Conductor Products Div.	Phoenix, Arizona
06228	Texas Instruments, Inc.	Dallas, Texas
06247	General Electric Co., Lamp Div. of Consumer Products Group	Cleveland, Ohio
10646	Carborundum Co.	Niagara Falls, New York
28569	The Hickok Electrical Instrument Co.	Cleveland, Ohio
70309	Allied Controls Co., Inc.	New York, New York
71785	Cinch Mfg. Corp.	Chicago, Illinois
82219	Sylvania Electric Products, Inc. Tube Division	Emporium, Pennsylvania
86684	Radio Corp. of America, Electron Tube Division	Harrison, New Jersey
88065	Duro Specialty Co., Inc.	West Lynn, Massachusetts
91662	Elco Corp.	Philadelphia, Pennsylvania
Mieth	Mieth, M. C. Mfg. Co.	Port Orange, Florida
Semtech	Semtech Corp.	Newbury Park, California

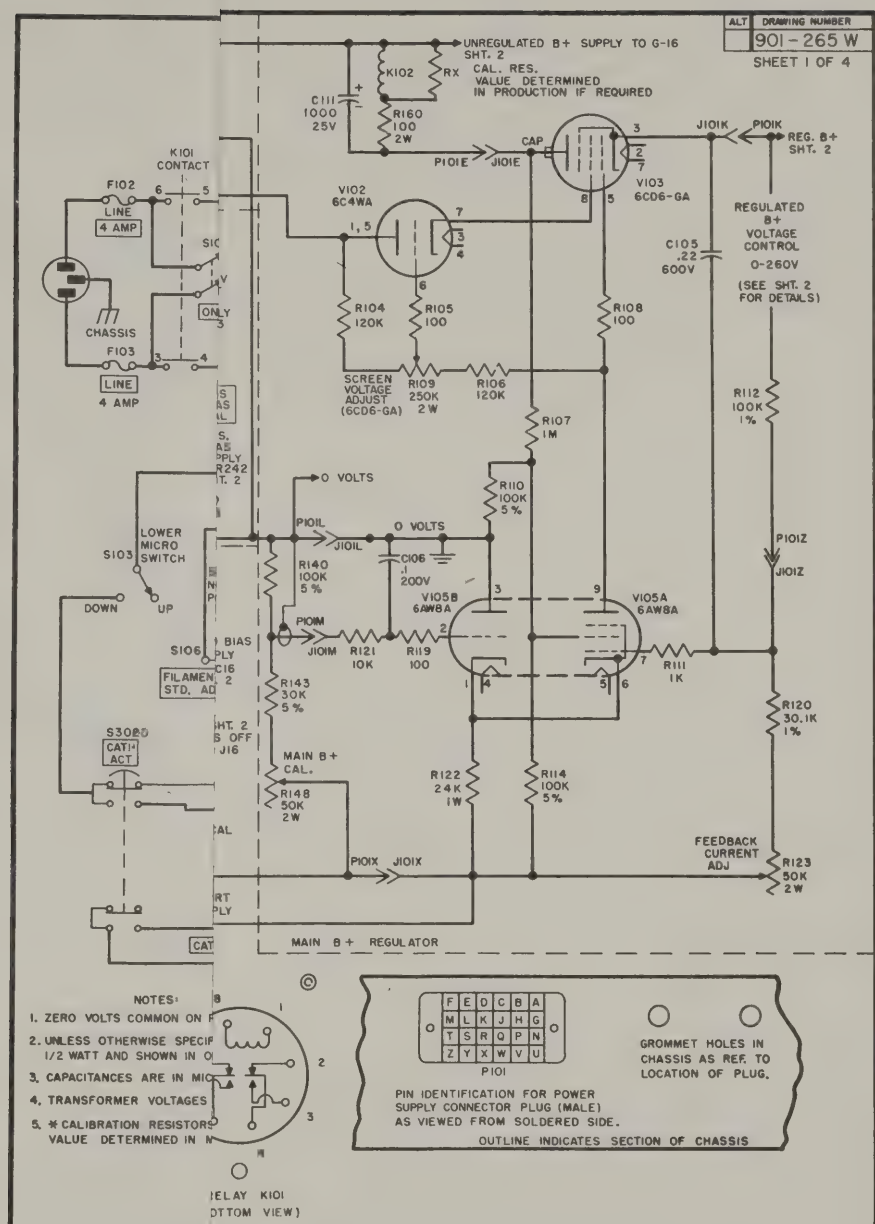
ALT
DRAWING NUMBER
901-265 W
SHEET 1 OF 4
UNREGULATED B+ SUPPLY TO G-16 SHT. 2
K102
RX
CAL. RES. VALUE DETERMINED IN PRODUCTION IF REQUIRED
C111 1000 25V
R160 100 2W
P101E
J101E
CAP
V103 6CD6-GA
J101K
P101K
REG. B+ SHT. 2
K101 CONTACT
F102
LINE
4 AMP
V102 6C4WA
REGULATED B+ VOLTAGE CONTROL 0-260V (SEE SHT. 2 FOR DETAILS)
C105 .22 600V
CHASSIS
F103
LINE
4 AMP
R104 120K
R105 100
R108 100
SCREEN VOLTAGE ADJUST (6CD6-GA)
R109 250K 2W
R106 120K
R112 100K 1%
R107 1M
0 VOLTS
R110 100K 5%
P101L
J101L
0 VOLTS
C106 .1 200V
P101Z
J101Z
LOWER MICRO SWITCH
S103
DOWN
UP
R140 100K 5%
V105B 6AW8A
V105A 6AW8A
P101M
J101M
R121 10K
R119 100
R111 1K
S106
FILAMENT STD. AD
R143 30K 5%
R120 30.1K 1%
S3020
CAT1 ACT
MAIN B+ CAL.
R148 50K 2W
R122 24K 1W
R114 100K 5%
FEEDBACK CURRENT ADJ
P101X
J101X
R123 50K 2W
MAIN B+ REGULATOR
NOTES:
1. ZERO VOLTS COMMON ON
2. UNLESS OTHERWISE SPECIF 1/2 WATT AND SHOWN IN O
3. CAPACITANCES ARE IN MIC
4. TRANSFORMER VOLTAGES
5. * CALIBRATION RESISTORS VALUE DETERMINED IN M
RELAY K101 (BOTTOM VIEW)
F E D C B A
M L K J H G
T S R Q P N
Z Y X W V U
P101
GROMMET HOLES IN CHASSIS AS REF. TO LOCATION OF PLUG.
PIN IDENTIFICATION FOR POWER SUPPLY CONNECTOR PLUG (MALE) AS VIEWED FROM SOLDERED SIDE.
OUTLINE INDICATES SECTION OF CHASSIS
SHEET 1 OF 4
DRAWING NUMBER
901-265 W
SCHEMATIC WIRING DIAGRAM
TUBE TESTER AN/USM-118B
DRAWN & TRACED
CHECKED
APP'D
DATE
W. H. TAYLOR
RHT
JDF
2-7-64
THE HICKOK ELECTRICAL INSTRUMENT CO.
CLEVELAND, OHIO
NO.
ALTERATION
BY

Table 7-2. List of Manufacturers

MFR. CODE	NAME	ADDRESS
02660	Amphenol-Borg Electronics Corp.	Chicago, Illinois
04713	Motorola, Inc., Semi-Conductor Products Div.	Phoenix, Arizona
06228	Texas Instruments, Inc.	Dallas, Texas
06247	General Electric Co., Lamp Div. of Consumer Products Group	Cleveland, Ohio
10646	Carborundum Co.	Niagara Falls, New York
28569	The Hickok Electrical Instrument Co.	Cleveland, Ohio
70309	Allied Controls Co., Inc.	New York, New York
71785	Cinch Mfg. Corp.	Chicago, Illinois
82219	Sylvania Electric Products, Inc. Tube Division	Emporium, Pennsylvania
86684	Radio Corp. of America, Electron Tube Division	Harrison, New Jersey
88065	Duro Specialty Co., Inc.	West Lynn, Massachusetts
91662	Elco Corp.	Philadelphia, Pennsylvania
Mieth	Mieth, M. C. Mfg. Co.	Port Orange, Florida
Semtech	Semtech Corp.	Newbury Park, California

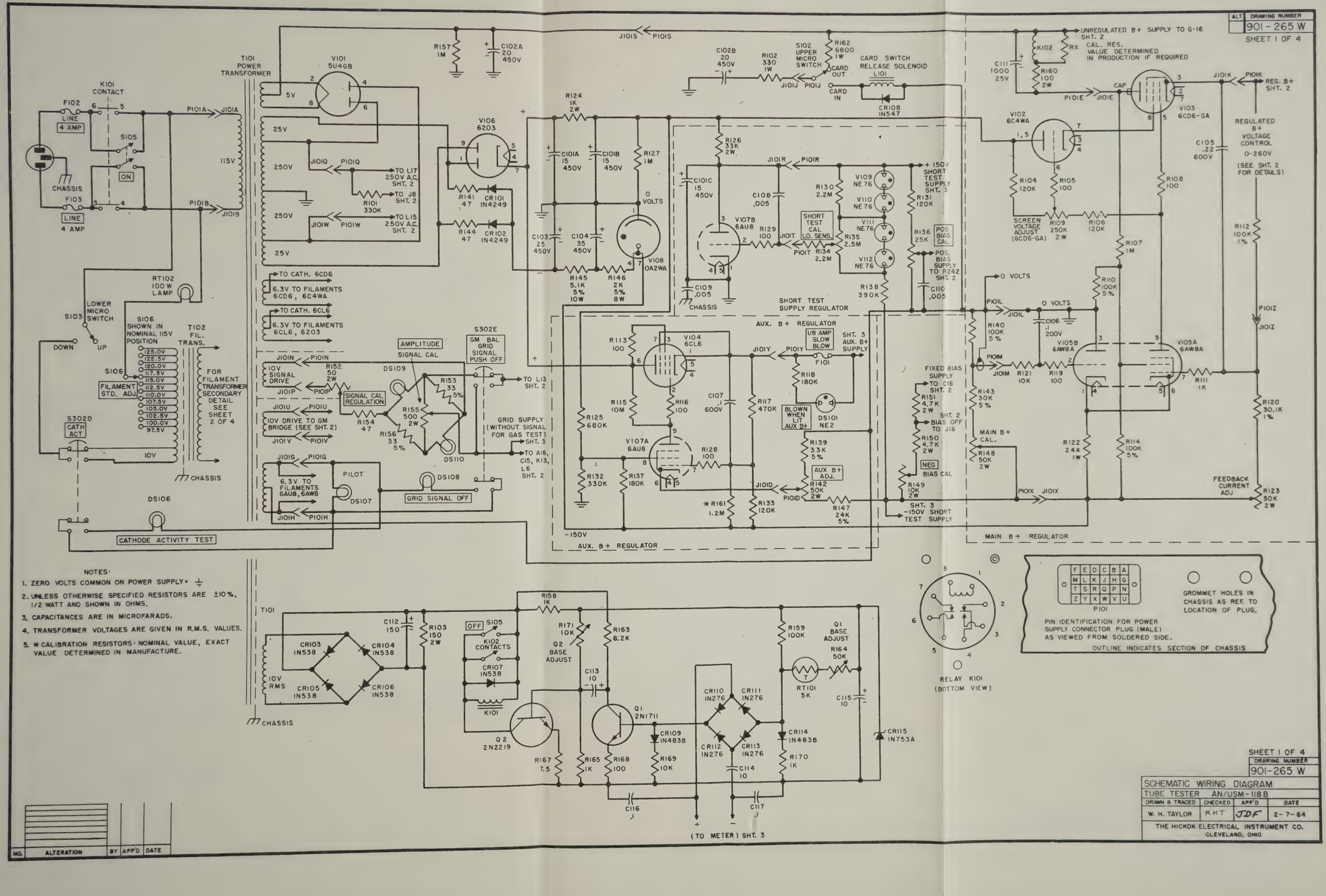
ALT
DRAWING NUMBER
901-265 W
SHEET 1 OF 4
T101 POWER TRANSFORMER
V101 5U4GB
K101 CONTACT
F102 LINE 4 AMP
F103 LINE 4 AMP
S105
ON
CHASSIS
115V
5V
25V
250V
J101A
J101B
P101A
P101B
J101Q
P101Q
TO L17 250V A.C. SHT. 2
R101 330K
TO J8 SHT. 2
J101W
P101W
TO L15 250V A.C. SHT. 2
TO CATH. 6CD6
6.3V TO FILAMENTS 6CD6, 6C4WA
TO CATH. 6CL6
6.3V TO FILAMENTS 6CL6, 6203
RT102 100 W LAMP
S103 LOWER MICRO SWITCH
DOWN
UP
S106 SHOWN IN NOMINAL 115V POSITION
FILAMENT STD. ADJ
125.0V
122.5V
120.0V
117.5V
115.0V
112.5V
110.0V
107.5V
105.0V
102.5V
100.0V
97.5V
T102 FIL. TRANS.
FOR FILAMENT TRANSFORMER SECONDARY DETAIL SEE SHEET 2 OF 4
S302D CATH ACT
10V
CHASSIS
DS106
CATHODE ACTIVITY TEST
J101N
P101N
10V SIGNAL DRIVE
R152 50 2W
P101P
J101P
SIGNAL CAL REGULATION
R154 47
J101U
P101U
10V DRIVE TO GM BRIDGE (SEE SHT. 2)
J101V
P101V
J101G
P101G
6.3V TO FILAMENTS 6AU8, 6AW8
J101H
P101H
PILOT
DS107
AMPLITUDE SIGNAL CAL
DS109
R153 33 5%
R155 500 2W
R156 33 5%
DS110
S302E GM BAL GRID SIGNAL PUSH OFF
TO L13 SHT. 2
GRID SUPPLY (WITHOUT SIGNAL FOR GAS TEST) SHT. 3
TO A16, C15, K13, L6 SHT. 2
DS108
GRID SIGNAL OFF
R157 1M
C102A 20 450V
V106 6203
R141 47
CR101 IN4249
R144 47
CR102 IN4249
R124 1K 2W
C101A 15 450V
C101B 15 450V
R127 1M
0 VOLTS
C103 25 450V
C104 35 450V
V108 0A2WA
R145 5.1K 5% 10W
R146 2K 5% 8W
J101S
P101S
C102B 20 450V
R102 330 1W
S102 UPPER MICRO SWITCH
R162 6800 1W
CARD OUT
CARD IN
CARD SWITCH RELEASE SOLENOID L101
CR108 IN547
J101J
P101J
R126 33K 2W
J101R
P101R
C101C 15 450V
C108 .005
V107B 6AU8
R129 100
J101T
P101T
SHORT TEST CAL LO. SENS.
R134 2.2M
R130 2.2M
R135 2.5M
R138 390K
V109 NE76
V110 NE76
V111 NE76
V112 NE76
+150V SHORT TEST SUPPLY SHT. 3
R131 120K
R136 25K
POS BIAS CAL
POS. BIAS SUPPLY TO R242 SHT. 2
C109 .005
CHASSIS
C110 .005
SHORT TEST SUPPLY REGULATOR
AUX. B+ REGULATOR
R113 100
V104 6CL6
J101Y
P101Y
1/8 AMP SLOW BLOW
F101
SHT. 3 AUX. B+ SUPPLY
R118 180K
DS101 NE2
BLOWN WHEN LIT AUX B+
R115 10M
R116 100
C107 .1 600V
R117 470K
R125 680K
V107A 6AU8
R128 100
R139 33K 5%
AUX B+ ADJ.
R142 50K 2W
R132 330K
R137 180K
*R161 1.2M
R133 120K
R147 24K 5%
J101D
P101D
-150V
AUX. B+ REGULATOR
UNREGULATED B+ SUPPLY TO G-16 SHT. 2
CAL. RES. VALUE DETERMINED IN PRODUCTION IF REQUIRED
K102
RX
R160 100 2W
C111 1000 25V
V102 6C4WA
V103 6CD6-GA
CAP
J101E
P101E
J101K
P101K
REG. B+ SHT. 2
REGULATED B+ VOLTAGE CONTROL 0-260V (SEE SHT. 2 FOR DETAILS)
C105 .22 600V
R104 120K
R105 100
SCREEN VOLTAGE ADJUST (6CD6-GA)
R109 250K 2W
R106 120K
R108 100
R107 1M
R112 100K 1%
R110 100K 5%
R111 1K
R120 30.1K 1%
0 VOLTS
J101L
P101L
C106 .1 200V
P101Z
J101Z
R140 100K 5%
P101M
J101M
R121 10K
R119 100
V105A 6AW8A
V105B 6AW8A
R143 30K 5%
FIXED BIAS SUPPLY TO C16 SHT. 2
R151 4.7K 2W
SHT. 2 BIAS OFF TO J16
R150 4.7K 2W
NEG BIAS CAL
R149 10K 2W
MAIN B+ CAL.
R148 50K 2W
R122 24K 1W
R114 100K 5%
FEEDBACK CURRENT ADJ
R123 50K 2W
P101X
J101X
SHT. 3 -150V SHORT TEST SUPPLY
MAIN B+ REGULATOR
NOTES:
1. ZERO VOLTS COMMON ON POWER SUPPLY = ⏚
2. UNLESS OTHERWISE SPECIFIED RESISTORS ARE ±10%, 1/2 WATT AND SHOWN IN OHMS.
3. CAPACITANCES ARE IN MICROFARADS.
4. TRANSFORMER VOLTAGES ARE GIVEN IN R.M.S. VALUES.
5. * CALIBRATION RESISTORS: NOMINAL VALUE, EXACT VALUE DETERMINED IN MANUFACTURE.
T101
CR103 IN538
CR104 IN538
CR105 IN538
CR106 IN538
10V RMS
CHASSIS
C112 150
R103 150 2W
R158 1K
R171 10K Q2 BASE ADJUST
R163 8.2K
OFF
S105
K102 CONTACTS
CR107 IN538
K101
C113 10
Q2 2N2219
Q1 2N1711
CR109 IN483B
R167 7.5
R165 1K
R168 100
R169 10K
CR110 IN276
CR111 IN276
CR112 IN276
CR113 IN276
C114 10
C116 .1
C117 .1
R159 100K
Q1 BASE ADJUST
R164 50K
RT101 5K
C115 10
CR114 IN483B
R170 1K
CR115 IN753A
(TO METER) SHT. 3
RELAY K101 (BOTTOM VIEW)
P101
PIN IDENTIFICATION FOR POWER SUPPLY CONNECTOR PLUG (MALE) AS VIEWED FROM SOLDERED SIDE.
OUTLINE INDICATES SECTION OF CHASSIS
GROMMET HOLES IN CHASSIS AS REF TO LOCATION OF PLUG.
NO. ALTERATION BY APP'D DATE
SHEET 1 OF 4
DRAWING NUMBER 901-265 W
SCHEMATIC WIRING DIAGRAM
TUBE TESTER AN/USM-118B
DRAWN & TRACED W. H. TAYLOR
CHECKED R.H.T
APP'D J.D.F
DATE 2-7-64
THE HICKOK ELECTRICAL INSTRUMENT CO. CLEVELAND, OHIO

+ OUTPUT VOLTS	CLOSE
10	D17, L3, L4
20	D17, E17, L4
30	D17, L4
40	D17, E17
50	D17
60	C17, E17, L3, L4
70	C17, L3, L4
80	C17, E17, L4
90	C17, L4
100	C17, E17
110	C17
120	B17, L3, L4
130	B17, E17, L4
140	B17, L4
150	B17, E17
160	B17
170	L2, L3, L4
180	L2, E17, L4
190	L2, L4
200	L2, E17
210	L2
220	L3, L4
230	E17, L4
240	L4
250	E17
260	NONE

LEAKAGE REJECT	CLOSE
10µA	NONE
20	A14
50	B14
70	A14, B14
100	C14
150	B14, C14
165	A14, B14, C14

ALT.	DRAWING NUMBER
	901-265 W

SHEET 2 OF 4

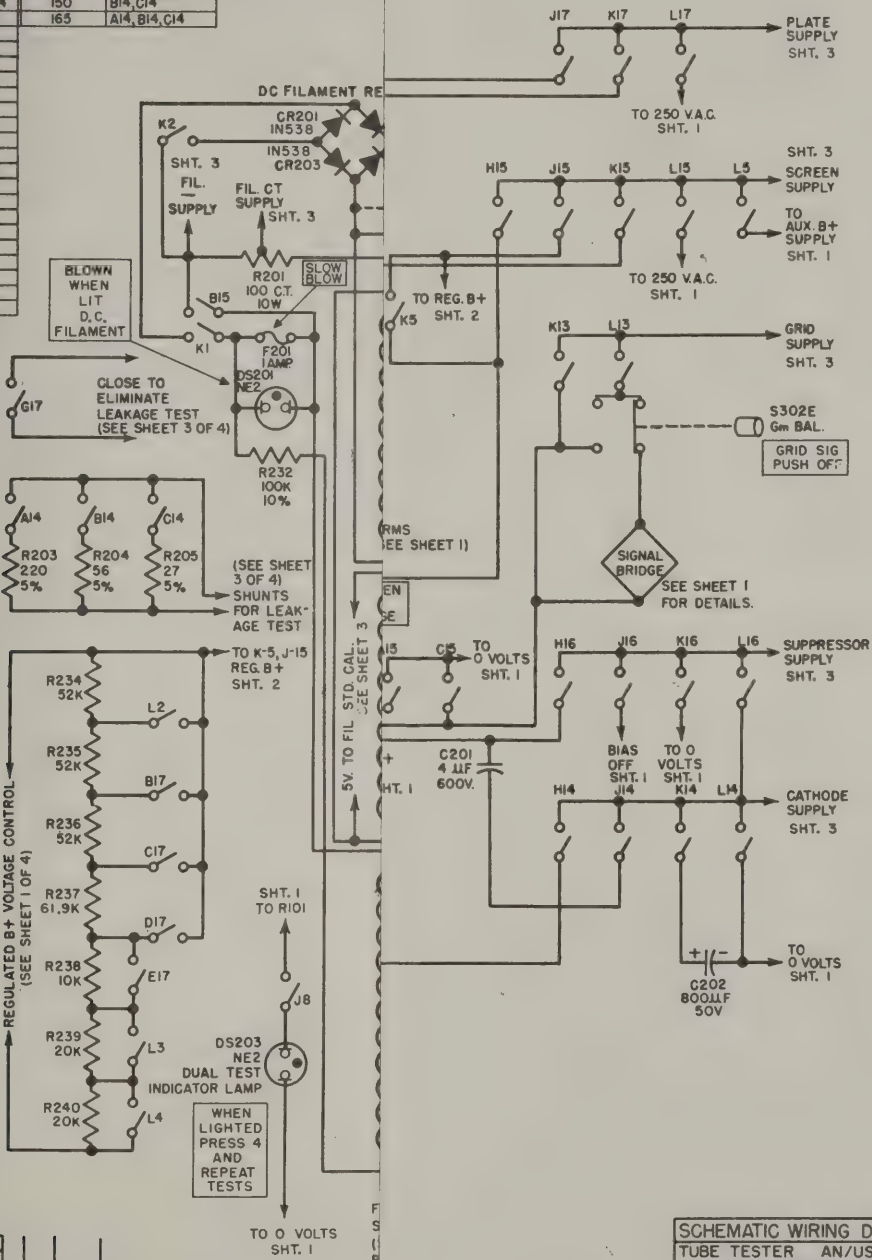

ALTERATION	BY	APP'D	DATE

SCHEMATIC WIRING DIAGRAM
TUBE TESTER AN/USM-118B

DRAWN & TRACED	CHECKED	APP'D	DATE
W. H. TAYLOR	RHT	JDF	2-11-64

SHEET 2 OF 4

DRAWING NUMBER 901-265 W

THE HICKOK ELECTRICAL INSTRUMENT CO.
CLEVELAND, OHIO

+ OUTPUT VOLTS	CLOSE
10	D17, L3, L4
20	D17, E17, L4
30	D17, L4
40	D17, E17
50	D17
60	C17, E17, L3, L4
70	C17, L3, L4
80	C17, E17, L4
90	C17, L4
100	C17, E17
110	C17
120	B17, L3, L4
130	B17, E17, L4
140	B17, L4
150	B17, E17
160	B17
170	L2, L3, L4
180	L2, E17, L4
190	L2, L4
200	L2, E17
210	L2
220	L3, L4
230	E17, L4
240	L4
250	E17
260	NONE

LEAKAGE REJECT	CLOSE
10 MA	NONE
20	A14
50	B14
70	A14, B14
100	C14
150	B14, C14
165	A14, B14, C14

ALT.	DRAWING NUMBER
	901-265 W

SHEET 2 OF 4

DC FILAMENT RECTIFIER

CR201 IN538 CR203 / CR202 IN538 CR204

SHT. 3 FIL. + SUPPLY

SHT. 3 FIL. − SUPPLY

FIL. CT SUPPLY SHT. 3

R201 100 CT. 10W SLOW BLOW

BLOWN WHEN LIT D.C. FILAMENT

F201 1 AMP

DS201 NE2

CLOSE TO ELIMINATE LEAKAGE TEST (SEE SHEET 3 OF 4)

R232 100K 10%

R203 220 5% / R204 56 5% / R205 27 5%

(SEE SHEET 3 OF 4) SHUNTS FOR LEAKAGE TEST

R234 52K / R235 52K / R236 52K / R237 61.9K / R238 10K / R239 20K / R240 20K

TO K-5, J-15 REG. B+ SHT. 2

REGULATED B+ VOLTAGE CONTROL (SEE SHEET 1 OF 4)

DS203 NE2 DUAL TEST INDICATOR LAMP

WHEN LIGHTED PRESS 4 AND REPEAT TESTS

SHT. 1 TO R101

TO 0 VOLTS SHT. 1

5V. TO FIL. STD. CAL. (SEE SHEET 3)

0V. .1V. .2V. .3V. .4V. .5V. .6V. .7V. .8V. .9V. 9V. 8V. 7V. 6V. 5V. 4V. 3V. 2V. 1V. 0V.

0V. 10V. 20V. 30V. 40V. 50V. 60V. 70V. 80V. 90V. 100V. 110V.

T102 FILAMENT TRANSFORMER SECONDARY WINDINGS (SEE SHEET 1 FOR T102 PRIMARY.)

R206 25.340K 0.5% / R207 1.28K / R208 640 / R209 320 / R210 160 / R211 80 / R212 40 / R213 20 4W / R214 10 4W

R241 1070

SHT. 3 QUALITY SUPPLY − / QUALITY SUPPLY + SHT. 3

TO 0 VOLTS SHT. 1

R230 100K 1W

CARD SWITCHES TOP DECK / BOTTOM DECK

SHT. 1 TO POSITIVE BIAS SUPPLY

R242 100

TO FIXED BIAS SUPPLY SHT. 1

R215 40 4W / R216 30 4W / R217 20 4W / R218 10 4W / R219 100 200MA / R220 200 200MA / R221 300 200MA / R222 400 200MA / R223 4K 50MA / R224 3K 67MA / R225 2K 100MA / R226 1K 35W / R231 20K 2W 5% / R227 20K 2W 5% / R228 20K 2W 5% / R229 30K 2W 5%

10K EQUIVALENT

R401 2 2W 10% / R402 10K 5% / R403 10K 5% / R404 10K 5% / R405 2.5K 2W 10% / R406 10K 5%

Gm BAL. HI Ib LOW Ib

IN540 CR401 SEE NOTE 4 / IN540 CR402 SEE NOTE 4 / IN540 CR403 SEE NOTE 4 / IN540 CR404 SEE NOTE 4

C401 .0033 μF / C402 1000 μF / C403 .0033 μF

TO 10V RMS (SEE SHEET 1)

1/4 AMP FAST BLOW ONLY

BLOWN WHEN LIT Gm BRIDGE

F202

R233 150K 10%

DS202 NE2

UNREG. B+ SUPPLY SHT. 1

C201 4 μF 600V.

C202 800 μF 50V

TO REG. B+ SHT. 2

TO 250 V.A.C. SHT. 1

PLATE SUPPLY SHT. 3

SCREEN SUPPLY SHT. 3

TO AUX. B+ SUPPLY SHT. 1

GRID SUPPLY SHT. 3

S302E Gm BAL.

GRID SIG PUSH OFF

SIGNAL BRIDGE SEE SHEET 1 FOR DETAILS.

SUPPRESSOR SUPPLY SHT. 3

CATHODE SUPPLY SHT. 3

BIAS OFF SHT. 1

TO 0 VOLTS SHT. 1

NOTES

1. + = CONNECTION, + = NO CONNECTION
2. RESISTANCES ARE SHOWN IN OHMS, K = 1,000 OHMS. ALL RESISTORS ARE 1/2 WATT ±1% UNLESS OTHERWISE NOTED.
3. * = DOTTED COMPONENT (PRESENTLY SHORT CIRCUITED) IS PLANNED FOR FUTURE USE.
4. IN Gm BRIDGE DIODES ARE MATCHED FOR EQUAL FORWARD RESISTANCE.

NO.	ALTERATION	BY	APP'D	DATE

SCHEMATIC WIRING DIAGRAM
TUBE TESTER AN/USM-118B

DRAWN & TRACED	CHECKED	APP'D	DATE
W. H. TAYLOR	RHT	JDF	2-11-64

SHEET 2 OF 4

DRAWING NUMBER 901-265 W

THE HICKOK ELECTRICAL INSTRUMENT CO. CLEVELAND, OHIO

ALT	DRAWING NUMBER
	901-265 W

SHEET 3 OF 4

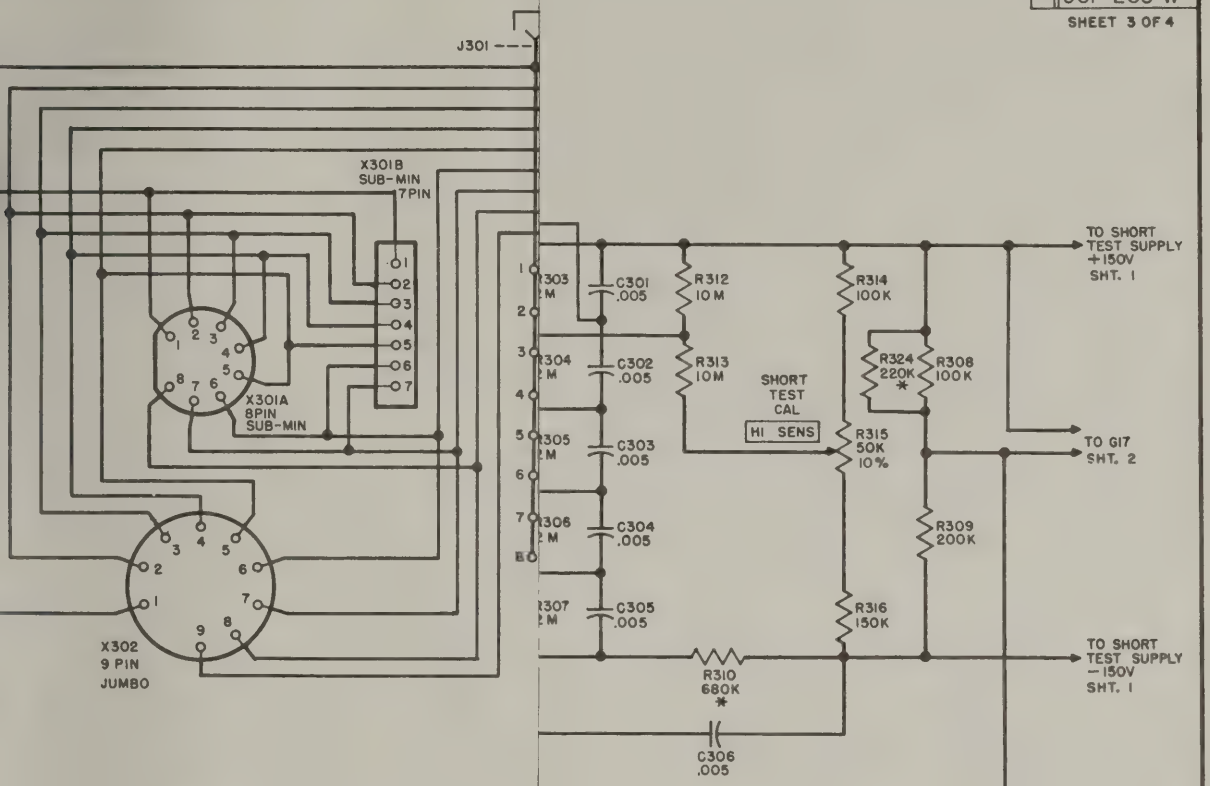

FROM
PROTECTION
CIRCUIT
SHT. 1

M30
100 μA F.S.
240 Ω
MAX

=1,000,000 OHMS.

NOTED.
HOWN IN UP POSITION.
ESSED.
EPRESSED.
MINED IN MANUFACTURE.

CARD SWITCHES

TOP DECK BOTTOM DECK

TERMINALS ON FILAM
TRANSFORMER SECONDARY
(SEE SHE

ALTERATION	BY	APP'D	DATE

SCHEMATIC WIRING DIAGRAM-
TUBE TESTER AN/USM-118B

DRAWN & TRACED	CHECKED	APP'D	DATE
W. H. TAYLOR	RHT	JDF	2-12-64

SHEET 3 OF 4

DRAWING NUMBER
901-265 W

THE HICKOK ELECTRICAL INSTRUMENT CO.
CLEVELAND, OHIO

ALT	DRAWING NUMBER
	901-265 W

SHEET 3 OF 4

TO P401

J301 1 2 3 4 5 6 7 8 9 10 11

X301B SUB-MIN 7PIN

X301A 8PIN SUB-MIN

X302 9 PIN JUMBO

A B C D E F G H J K

1 2 3 4 5 6 7 8

SHT. 2 TO FIL + SUPPLY

TO FIL − SUPPLY SHT. 2

GRID

CATHODE

SCREEN

SUPPRESSOR

PLATE

L1

SHT. 1 TO 0 VOLTS

AUX. CATHODE

R317 470K 10%

PUSH TO READ

PUSH TO READ

BUTTON #4 S301C DUAL TEST

BUTTON #2 S301A QUALITY Gm OR Ib

BUTTON #3 S301B GAS

SENSITIVE GRID SHORTS PUSH TO READ S302C

S302A FILAMENT VOLTS

S302B AUX B+ ADJUST

FROM PROTECTION CIRCUIT SHT. 1

M301 100 μA F.S. 240 Ω MAX

CR301 IN538

CR302 IN538

R311 100 2W 10% METER CALIB.

R318 270-10%

R319 270 10%

R320 3M 1%

20

15

5V RMS

TERMINALS ON FILAMENT TRANSFORMER SECONDARY T102 (SEE SHEET 2)

CR303 IN538

R322 33K

R323 25K 10%

R321 39K 10%

FILAMENT STD. CAL.

TO AUX B+ SUPPLY SHT. 1 SHT. 2

TO 0 VOLTS SHT. 1

TO SHUNTS FOR LEAKAGE TESTS (A14, B14, C14) (SEE SHEET 2)

TO CATHODE SUPPLY SHT. 2

SHT. 2 TO SUPPRESSOR SUPPLY

TO SCREEN SUPPLY SHT. 2

TO PLATE SUPPLY SHT. 2

TO FIL. C.T. SUPPLY SHT. 2

R302 270 10%

R301 47K 10%

TO K13 GRID SUPPLY WITHOUT SIGNAL (SEE SHEET 1)

TO − QUALITY SUPPLY SHT. 2

TO + QUALITY SUPPLY SHT. 2

TO GRID SUPPLY SHT. 2

SHORT TEST LAMPS

DS301 NE2

DS302 NE2

DS303 NE2

DS304 NE2

DS305 NE2

R303 2M

R304 2M

R305 2M

R306 2M

R307 2M

C301 .005

C302 .005

C303 .005

C304 .005

C305 .005

R312 10M

R313 10M

SHORT TEST CAL HI SENS

R310 680K *

C306 .005

R314 100K

R324 220K *

R308 100K

R315 50K 10%

R309 200K

R316 150K

TO SHORT TEST SUPPLY +150V SHT. 1

TO G17 SHT. 2

TO SHORT TEST SUPPLY −150V SHT. 1

NOTES:

1. ✦ = CONNECTION, + = NO CONNECTION.
2. RESISTANCES ARE SHOWN IN OHMS. K = 1000 OHMS, MEGOHMS (M) = 1,000,000 OHMS. ALL RESISTORS ARE 1/2 WATT ±5%, UNLESS OTHERWISE NOTED
3. CAPACITANCES ARE SHOWN IN MICROFARADS, UNLESS OTHERWISE NOTED.
4. PUSHBUTTON SWITCHES NO. S301A, B, C AND S302A, B, C ARE SHOWN IN UP POSITION.
5. SWITCH NO. S301A OPERATES WHEN PUSHBUTTON NO. 2 IS DEPRESSED.
6. BOTH S301A AND S301B OPERATE WHEN PUSHBUTTON NO. 3 IS DEPRESSED.
7. * CALIBRATION RESISTORS, NOMINAL VALUE, EXACT VALUE DETERMINED IN MANUFACTURE. (R324 TRIMS R308 FOR 100 VOLT DROP.)

CARD SWITCHES

TOP DECK BOTTOM DECK

ALTERATION	BY	APP'D	DATE

SCHEMATIC WIRING DIAGRAM—
TUBE TESTER AN/USM-118B

DRAWN & TRACED	CHECKED	APP'D	DATE
W. H. TAYLOR	RHT	JDF	2-12-64

SHEET 3 OF 4

DRAWING NUMBER 901-265 W

THE HICKOK ELECTRICAL INSTRUMENT CO. CLEVELAND, OHIO

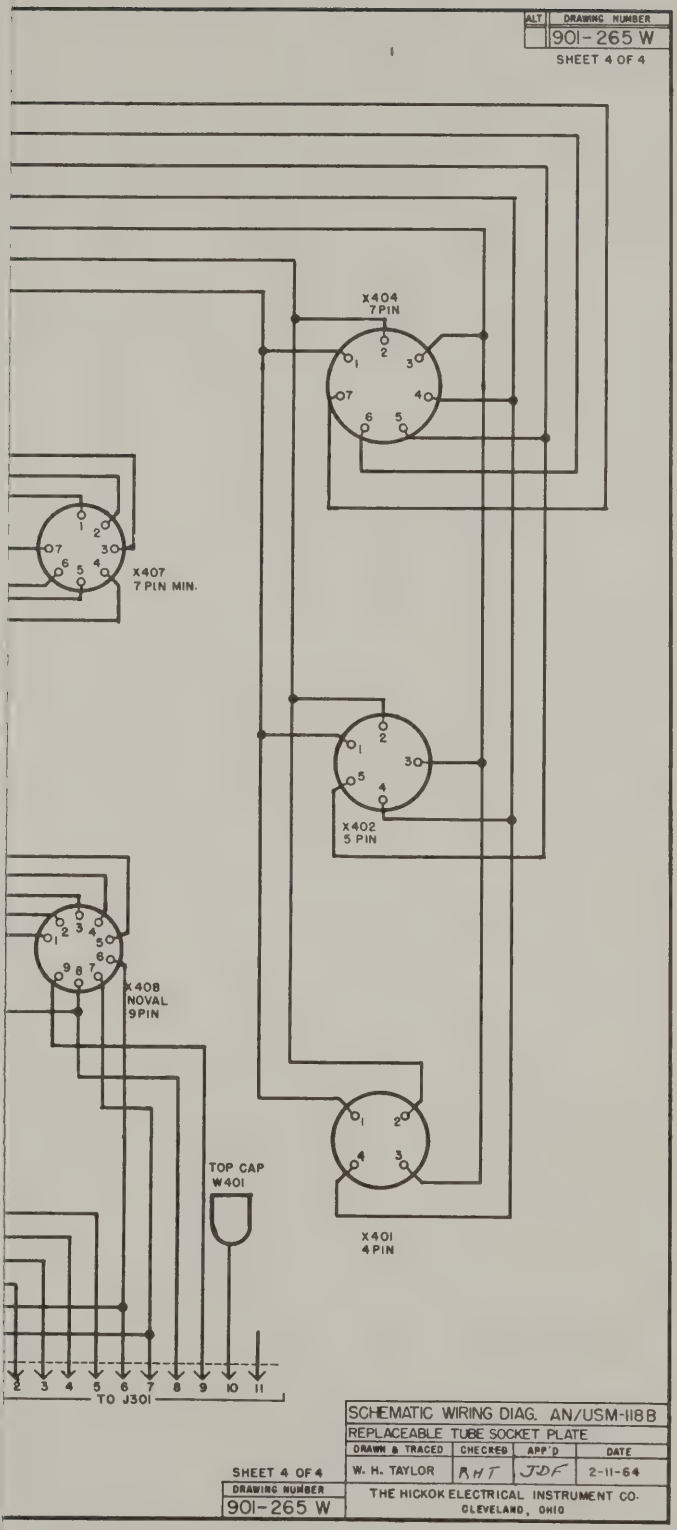
ALT
DRAWING NUMBER
901-265 W
SHEET 4 OF 4
X404
7 PIN
X407
7 PIN MIN.
X402
5 PIN
X408
NOVAL
9 PIN
TOP CAP
W401
X401
4 PIN
2 3 4 5 6 7 8 9 10 11
TO J301
SCHEMATIC WIRING DIAG. AN/USM-118B
REPLACEABLE TUBE SOCKET PLATE
DRAWN & TRACED
CHECKED
APP'D
DATE
W. H. TAYLOR
RHT
JDF
2-11-64
THE HICKOK ELECTRICAL INSTRUMENT CO.
CLEVELAND, OHIO
SHEET 4 OF 4
DRAWING NUMBER
901-265 W

ALT	DRAWING NUMBER
	901-265 W

SHEET 4 OF 4

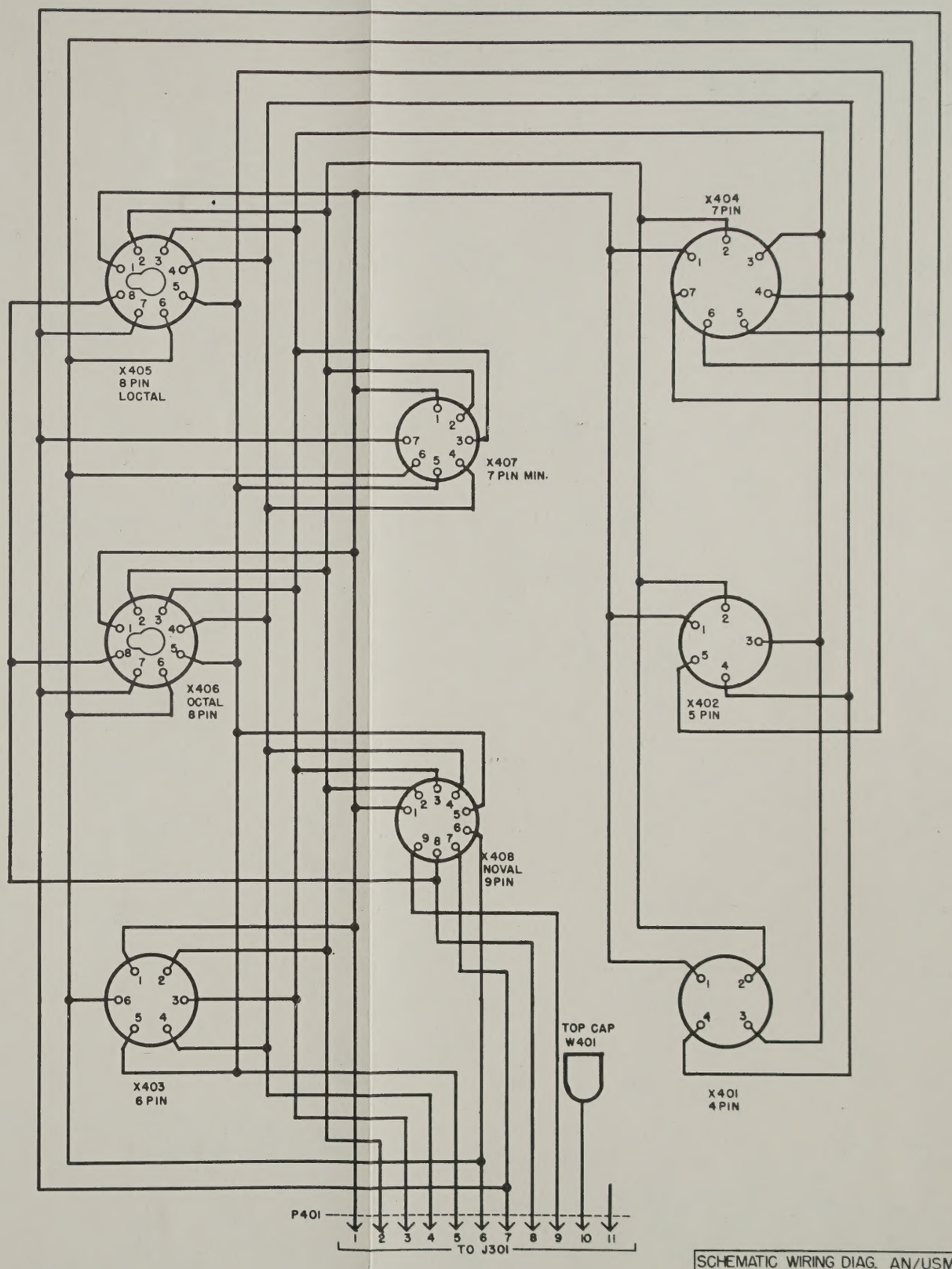

NO.	ALTERATION	BY	APP'D	DATE

SCHEMATIC WIRING DIAG. AN/USM-118B

REPLACEABLE TUBE SOCKET PLATE

DRAWN & TRACED	CHECKED	APP'D	DATE
W. H. TAYLOR	RHT	JDF	2-11-64

SHEET 4 OF 4

DRAWING NUMBER 901-265 W

THE HICKOK ELECTRICAL INSTRUMENT CO.
CLEVELAND, OHIO